EtherTRAK® -2 and Etherbus®

Dual Ethernet I/O Module

September 2019

LP1116

Revision A

www.redlion.net

Copyright

©2014-2019 Red Lion Controls, Inc. All rights reserved. Red Lion, the Red Lion logo and Sixnet are registered trademarks of Red Lion Controls, Inc. All other company and product names are trademarks of their respective owners.

Red Lion Controls, Inc.

20 Willow Springs Circle

York, PA 17406

CONTACT INFORMATION

Inside US: +1 (877) 432-9908
Outside US: +1 (717) 767-6511
Website: www.redlion.net
Support: support.redlion.net

TRADEMARK ACKNOWLEDGMENTS

Ethernet is a registered trademark of Xerox Corporation.

All other company and product names are trademarks of their respective owners.

CHANGE HISTORY

Version	Date	Description
R13	06/30/2011	Format changes and addition of individual specifications
R14	07/07/2011	Format changes
R15	01/31/2013	Correction to OK and Alert LED definition. Sinking or Sourcing input clarification
R16	04/23/2013	Change UL mark from UL1604 to ANSI / ISA12.12.0.1
R18	12/20/2013	Add French UL Safety Warnings
R19	01/14/2014	Changed branding from Sixnet to Red Lion, added E2-MIX20884-D, improved wiring diagrams, clarified specifications, cold junction compensation redundancy feature.
R20	07/29/2014	Changed update time, screw terminal numbering and ON voltage
R21	09/30/2014	Modifed max. output power for E2/EB-16DORLY-D
R22	09/15/2019	Added note in Environmental specifications, updated limited warranty, and updated service information

Table of Contents

Chapter 1 Product Overview 8

1.1 Specifications 8

1.1.1 General Specifications 8
1.1.2 E2/EB-MIX24880-D and E2/EB-MIX24882-D Specifications 10
1.1.3 E2-MIX20884-D Specifications 11
1.1.4 E2/EB-32DI24-D Specifications 14
1.1.5 E2/EB-16DI24-D Specifications 14
1.1.6 ED-16DIAC-D Specifications 15
1.1.7 E2/EB-32DO24D Specifications 15
1.1.8 E2/EB-16DO24D Specifications 16
1.1.9 E2/EB-16DORLY-D Specifications 16
1.1.10 E2/EB-32AI20M-D Specifications 17
1.1.11 E2/EB-32AI10V-D Specifications 17
1.1.12 E2/EB-16AI20M Specifications 17
1.1.13 E2/EB-16ISO20M-D Specifications 18
1.1.14 E2/EB-16ISOTC-D Specifications 18
1.1.15 E2/EB-10RTD-D Specifications 19
1.1.16 E2/EB-16AI8AO-D Specifications 19
1.1.17 E2/EB-8AO20M Specifications 20

1.2 Red Lion Software Tools 20

1.3 Getting Started with Red Lion Hardware 21

1.4 USB Installation Instructions 22

Chapter 2 Assembly and Instruction 24

2.1 Panel Assembly 24

2.2 Replacing the Logic Module 25

2.3 Base Cover 25

Chapter 3 Jumper Settings 26

3.1 Setting the Network Jumper 26

3.2 Setting the DI COM Jumper 28

3.3 RS485 Jumper on the E2-MIX20884-D Base 29

Chapter 4 Power Wiring Alternatives 30

4.1 Power Requirements 30

4.2 Current Requirements 30

4.3 Power Wiring 30

4.4 Etherbus PoE Option 31

4.5 Base Power and Communication Wiring Diagram 32

Chapter 5 Module Wiring / Screw Terminal Assignments 34

5.1 Screw Terminal Guidelines 34

5.2 Typical I/O Wiring 34

5.2.1 Table A Modules E2/EB-MIX24880 and MIX24882 35
5.2.2 Table B Modules 32DI24, 32DI24, 32AI20M, 32AI10V 37
5.2.3 TABLE C Modules 16DI24, 16DIAC, 16DO24 38
5.2.4 Table D Modules 8AO20M, 16AI20M, 16AI8AO 39
5.2.5 Table E Modules 10RTD 40
5.2.6 Table F Modules 16ISOTC 41
5.2.7 Table G Module 16ISO20M 42
5.2.8 Table H Module 16DORLY 43
5.2.9 Table I Module E2-MIX20884-D 44

Chapter 6 I/O Functions 45

6.1 High Density Discrete Outputs 45
6.2 Sourcing/Sinking Input Option 45
6.3 Low Threshold Inputs 45
6.4 Isolated Discrete Inputs 46
6.5 Discrete Input Counter Feature 46
6.6 High Speed Counters 47
6.7 Slow/Fast Response for All Discrete Inputs 47
6.8 Combination Discrete Inputs/Outputs 47
6.9 High Density Discrete Output 48
6.10 Isolated Discrete Outputs 48
6.11 Isolated Output Relays 48
6.12 Time Proportioned Outputs (TPO) 48
6.13 4-20 mA Analog Input Wiring 49
6.14 Isolated Analog Inputs 50
6.15 Voltage Range Analog Inputs 50
6.16 High Speed Analog Inputs 50
6.17 Analog Output 50
6.18 RTD Inputs 50
6.19 Thermocouple and mV Inputs 51
6.20 Watchdog Output 52
6.21 Heartbeat Monitor 52

Chapter 7 Communications 53

7.1 Dual Ethernet Mode Configuration Alternatives 53
7.2 Communication Ports Overview 54
7.2.1 RS-485 Modes of Operation 55

Chapter 8 EtherTRAK-2 Status 56

8.1 EtherTRAK-2 LEDs 56
8.2 Power LED Indication 56
8.3 Alert LED Indication 57
8.4 OK LED Indication 57

8.5 Ring LED Indication 57
8.6 Ethernet Link Activity Indication 58
8.7 TR/RD Activity Indication 58
8.8 Discrete LED Indication 58
8.9 Analog Input Status 59

Chapter 9 Configuring EtherTRAK-2 I/O Modules 60
9.1 WebServer Overview 60
9.2 Setting the IP Address 60
9.3 Audit Trail Change History 61
9.4 Adding User Documents to the Web Server 61
9.5 Sixnet® I/O Tool Kit Software 61

Chapter 10 Module to Wiring Base Keying 62

Chapter 11 Service Information 64

INSTALLATION AND HAZARDOUS AREA WARNINGS

These products should not be used to replace proper safety interlocking. No software-based device (or any other solid-state device) should ever be designed to be responsible for the maintenance of consequential equipment or personnel safety. In particular, Red Lion disclaims any responsibility for damages, either direct or consequential, that result from the use of this equipment in any application.

All power, input and output (I/O) wiring must be in accordance with Class I, Division 2 wiring methods and in accordance with the authority having jurisdiction.

WARNING – EXPLOSION HAZARD – SUBSTITUTION OF COMPONENTS MAY IMPAIR SUITABILITY FOR CLASS 1, DIVISION 2.
WARNING – EXPLOSION HAZARD – WHEN IN HAZARDOUS LOCATIONS, DISCONNECT POWER BEFORE REPLACING OR WIRING MODULES.
WARNING – EXPLOSION HAZARD – DO NOT DISCONNECT EQUIPMENT UNLESS POWER HAS BEEN SWITCHED OFF OR THE AREA IS KNOWN TO BE NONHAZARDOUS.

These products are operator interface units to be used within control panels. These devices are intended for use in Class I, Division 2, Hazardous Locations, industrial control applications. The enclosure shall be suitable for the location.

A minimum IP54 rated enclosure is needed for ATEX unless an equivalent degree of protection is supplied by the location.

These products are to be used within control panels in hazardous locations. The enclosure shall be suitable for this location. Hot-swapping is not for use in hazardous locations.

AVERTISSEMENTS POUR INSTALLATION ET ENDROITS DANGEREUX

Ces produits ne doivent pas être utilisés pour remplacer le verrouillage de sécurité approprié. Aucun dispositif basé sur un logiciel (ou tout autre dispositif à l'état solide) devraient jamais être conçus pour être responsable de l'entretien de l'équipement consécutifs ou la sécurité du personnel. En particulier, Red Lion décline toute responsabilité pour les dommages, directs ou indirects, résultant de l'utilisation de cet équipement dans n'importe quelle application.

Tout courant, câblage entrée et sortie (I / O) doit être conforme aux méthodes de câblage à la Classe I, Division 2 et conformément à l'autorité compétente.

AVERTISSEMENT – RISQUE D'EXPLOSION – LA SUBSTITUTION DE TOUT COMPOSANT PEUT NUIRE À LA CONFORMITÉ DE CLASSE I, DIVISION 2
AVERTISSEMENT – RISQUE D'EXPLOSION – LORSQUE DANS DES ENDROITS DANGEREUX, DÉBRANCHEZ LE CORDON D'ALIMENTATION AVANT DE REMPLACER OU DE BRANCHER LES MODULES.
AVERTISSEMENT – RISQUE D'EXPLOSION – NE DÉBRANCHEZ PAS L'ÉQUIPEMENT À MOINS QUE L'ALIMENTATION AIT ÉTÉ COUPÉE OU QUE L'ENVIRONNEMENT EST CONNU POUR ÊTRE NON DANGEREUX.

Ces produits sont des unités d'interface opérateur qui doivent être utilisés à l'intérieur des panneaux de commande. Ces appareils sont destinés à une utilisation en Classe I, Division 2, zones dangereuses, applications de contrôle industriel. L'enclos doit être adapté à l'environnement lieu.

Un boîtier IP54 minimum est nécessaire pour ATEX à moins qu'un degré équivalent de protection est fourni par l'emplacement.

Lorsque dans des endroits dangereux, ces produits doivent être utilisés dans des panneaux de contrôle. Pas de remplacement à chaud des modules dans les zones dangereuses.

Note: All information in this document applies to EtherTRAK-2 and Etherbus I/O modules except where otherwise noted. Refer to www.redlion.net, the web server within the I/O module, or Sixnet I/O Tool Kit Windows software online help systems for detailed product specifications and configuration settings.

LIMITED WARRANTY

(a) Red Lion Controls Inc., (the “Company”) warrants that all Products shall be free from defects in material and workmanship under normal use for the period of time provided in “Statement of Warranty Periods” (available at www.redlion.net) current at the time of shipment of the Products (the “Warranty Period”). **EXCEPT FOR THE ABOVE-STATED WARRANTY, COMPANY MAKES NO WARRANTY WHATSOEVER WITH RESPECT TO THE PRODUCTS, INCLUDING ANY (A) WARRANTY OF MERCHANTABILITY; (B) WARRANTY OF FITNESS FOR A PARTICULAR PURPOSE; OR (C) WARRANTY AGAINST INFRINGEMENT OF INTELLECTUAL PROPERTY RIGHTS OF A THIRD PARTY; WHETHER EXPRESS OR IMPLIED BY LAW, COURSE OF DEALING, COURSE OF PERFORMANCE, USAGE OF TRADE OR OTHERWISE.** Customer shall be responsible for determining that a Product is suitable for Customer’s use and that such use complies with any applicable local, state or federal law.

(b) The Company shall not be liable for a breach of the warranty set forth in paragraph (a) if (i) the defect is a result of Customer’s failure to store, install, commission or maintain the Product according to specifications; (ii) Customer alters or repairs such Product without the prior written consent of Company.

c) Subject to paragraph (b), with respect to any such Product during the Warranty Period, Company shall, in its sole discretion, either (i) repair or replace the Product; or (ii) credit or refund the price of Product provided that, if Company so requests, Customer shall, at Company’s expense, return such Product to Company.

(d) THE REMEDIES SET FORTH IN PARAGRAPH (c) SHALL BE THE CUSTOMER’S SOLE AND EXCLUSIVE REMEDY AND COMPANY’S ENTIRE LIABILITY FOR ANY BREACH OF THE LIMITED WARRANTY SET FORTH IN PARAGRAPH (a).

Chapter 1 Product Overview

This manual will help you install and maintain EtherTRAK-2® I/O modules. In summary, wiring for power, communications and I/O is connected to each module's base. Then, setup choices are entered using a web browser looking at the embedded web server within the module itself or the Sixnet® I/O Tool Kit Windows software.

1.1 Specifications

1.1.1 General Specifications

These general specifications apply to all EtherTRAK-2 I/O modules. More detailed product specifications may be found at www.redlion.net.

Power Supply voltage: 10 - 30 VDC
Input current requirement: 100 mA @ 24 VDC typica w/ no loads
I/O registers available for additional expansion
I/O: 512 discrete inputs and outpus plus 256 analog inputs and output registers
Unique station addresses 16, 000+ (Sixnet or Modbus)

Environmental
Operating temparture of -40 to 75°C (-40 to 85°C storage)
Mounting DNC rail (EN50022) or direct to panel or flat panel mount
Humidity 5 to 95% RH (non-condensing) (optional conformal coating)
Flammability UL 94V-0 materials
Electrical Safety UL508, CSA C22.2/142; EN61010-1 (IEC1010); CE
EMI emissions FCC part 15, ICES-003, Class A; EN55022; EN6100-6-4; CE
EMC immunity EN61000-6-2 (EN61000-4-2,3,4,5,6,8); CE
Vibration: IEC60068-2-6**
Shock: IEC60068-2-27**
***** Note: In environments with high vibration the industrial cable assemblies may unlink briefly. Communication will recover on its own, but brief loss of communication may occur. Vibration resistant cable assemblies are recommended for applications with high vibration.***
Hazardous locations Class 1, Div 2, Groups A, B, C, D, CSA C22.2/213; ISA12.12.01; ATEX Zone 2*
Marine and offshore tested and/or verified to meet various marine and maritime standards such as ABS, DNV No. 2.4 and Lloyds.
Packaging Impact resistant Lexan® polycarbonate

Module and Base: 5.5"L x 3.5"W x 5.1"H (14cm x 8.9cm x 13cm)

**** E2/EB-16DIAC-D does not comply with ATEX Zone 2***

Etherbus Specifications

Etherbus® PoE power (EB- only) 10 Watts at 60°C for user loads

De-rate to 5 Watts at 75°C

Note: Not applicable to E2-MIX20884-D, and E2-16DIAC-D

Ethernet (2 ports) Specifications

Ethernet Port(s): 10/100BaseTx (auto-detecting)

Connection: RJ45 (auto-crossover)

Isolation: 1500 Volts RMS 1 minute (60 Hz.)

Message response time is less than 1 ms per message

Message response time is less than 1 ms per message

Protocols supported: TCP/IP, ARP, UDP, ICMP, DHCP, HTTP, Modbus UDP/TCP Slave mode, Modbus UDP Master mode, Sixnet UDR UDP/TCP Slave mode, and Sixnet UDR UDP Master mode.

Real-time Ring™ 5 ms per hop recovery time

Independent networks, 1 or 2 with unique MAC and IP address

Serial Ports

RS485 port, Screw terminals (485+, 485-, GND) (2-wire half-duplex, not isolated); E2/EB-10RTD-D and E2-MIX20884-D isolated to 150V

RS485 networking, Up to 32 (full-load) stations

RS485 distance, Up to 0.5 miles (baud rate dependent)

Baud Rates from 300 to 57,600 baud

Protocols: master and slave: Sixnet and Modbus RTU / ASCII

Diagnostic LEDs: Transmit (TD) and Receive (RD)

Web Interface

Secure Web Access with Password protection for multiple users

1 Simultaneous User

750K Memory for User Pages (more with special order)

1.1.2 E2/EB-MIX24880-D and E2/EB-MIX24882-D Specifications

Discrete Input Channels
Voltage range: 10 - 30 VDC
Input Polarity: Sourcing (apply power to active) or sinking (ground closure) on 8 inputs
Guaranteed ON voltage: 9 VDC
Guaranteed OFF voltage: 5.0 VDC
Guaranteed OFF current: 2 mA DC
Input resistance: 10 Kohms
Input current (@ 24 VDC) 3 mA
Input Protection: High Impedance with overvoltage protection
Filtered ON/OFF delay: 25 ms (20 Hz. max. counting rate)
Fastest response: 1 ms (400 Hz. max. counting rate)
Special fast counting rate: Up to 50 KHz on channels 1 and 2
Pulse Counting Options: Count up, pulse timing and pulse rate 16 or 32 bit reporting
Scan rate (all channels) 1 ms

Discrete Output Channels
Output voltage range 10-30 VDC
Max. output power: 1A per channels, 8A per module, 0.8A at 60°C 1 channel, 0.4A at 60°C 8 channels at 24 VDC
Max. off state leakage: 0.01 mA (less than 10 uA)
Short circuit protection, self-reset fuses (trip above 1.5 Amp)
Min. load: 1 mA
Inrush current: 5 Amps (100 ms surge)
Typical on resistance: 0.3 Ohms (Drop 0.3 VDC @ 1 Amp)
Input isolation: 150 Volts (16 channel modules only)
All channels Scan rate: 1 ms

Analog Input Channels
Analog Input Range: 4-20 mA
A/D resolution 16 bits (0.003%) 10 bits (fast option)
Full scale accuracy: +/- 0.02% (at 20 °C, 16 bit mode)
Temperature coefficient +/- 50 ppm per °C (span and offset)
Input impedance (resistance): 100 ohms

Protection: Self-resetting short circuit protection fuses

DMRR (differential mode) 66 db at 50/60 Hz

Fastest update time [# of chan.]: 880 ms [all] -16-bit; 145 ms [all] -14-bit; 1 ms [2] -10-bit

Analog Input Channels (applies only to E2/EB-MIX24882-D)
Analog output range: 4-20 mA
D/A resolution 16 bits (less than 1 uA)
Full scale accuracy +/-0.02% (at 20°C)
Max. output settling time 5 ms (to .05%)
Load resistance (@ 24 V) 0-750 Ohms
Load resistance (@ 10V) 300 Ohms
DMRR (differential mode) 66 db at 50/60 Hz
Current limiting short circuit protection

1.1.3 E2-MIX20884-D Specifications

Serial Ports
RS485 port, Screw terminals (485+, 485-, GND) (2-wire half-duplex, isolated)
Isolations voltage, 150V
RS485 networking, Up to 32 (full-load) stations
RS485 distance, Up to 0.5 miles (baud rate dependent)
Baud Rates from 300 to 57,600 baud
Protocols: master and slave: Sixnet and Modbus RTU / ASCII
Diagnostic LEDs: Transmit (TD) and Receive (RD)

Isolated Discrete Input Channels
Channels: 1-4
Voltage range: 5 - 30 VDC
Guaranteed ON voltage: 4.0 VDC
Guaranteed OFF voltage: 1.5 VDC
Guaranteed OFF current: 1 mA DC
Input resistance (@ 24 VDC): 2.5K Ohms
Input current (@ 24 VDC): 9.6 mA
Common mode and channel-to-channel Isolation: 150 VDC
Filtered ON/OFF delay: 25 ms (20 Hz. max. counting rate)
Fastest response: 1 ms (400 Hz. max. counting rate)

Special fast counting rate: Up to 50 KHz on channels 1 and 2

Pulse Counting Options: Count up, pulse timing and pulse rate 16 or 32 bit reporting

Non-Isolated Discrete Input Channels

Channels: 5-12

Voltage range: 10 - 30 VDC

Guaranteed ON voltage: 9.0 VDC

Guaranteed OFF voltage: 5.0 VDC

Guaranteed OFF current: 2 mA DC

Input resistance: 10K Ohms

Input current (@ 24 VDC) 3 mA

Input Polarity: Sourcing (apply power to active) or sinking (ground closure) on 8 inputs

Input Protection: High Impedance with overvoltage protection

Filtered ON/OFF delay: 25 ms (20 Hz. max. counting rate)

Fastest response: 1 ms (400 Hz. max. counting rate)

Pulse Counting Options: Count up, pulse timing and pulse rate 16 or 32 bit reporting

Non-Isolated Combination Discrete Input Channels

Channels: 13-20

Channel Type: Discrete input and discrete output combination channel (software selectable)

Voltage range : 10 - 30 VDC

Guaranteed ON voltage: 9.0 VDC

Guaranteed OFF voltage: 5.0 VDC

Guaranteed OFF current: 2 mA DC

Input resistance: 10K Ohms

Input current (@ 24 VDC) 3 mA

Input Protection: High Impedance with overvoltage protection

Filtered ON/OFF delay: 25 ms (20 Hz. max. counting rate)

Fastest response: 1 ms (400 Hz. max. counting rate)

Pulse Counting Options: Count up, pulse timing and pulse rate 16 or 32 bit reporting

Discrete Output Channels

Output voltage range 10-30 VDC

Max. output power: 1A per channels, 8A per module, .8A at 60ºC 1 channel, .4A at 60ºC 8 channels, .1A at 75ºC.

Max. off state leakage: 0.01 mA (less than 10 uA)

Short circuit protection, self-reset fuses (trip above 1.5 Amp)

Min. load: 1 mA

Inrush current: 5 Amps (100 ms surge)

Typical on resistance: 0.3 Ohms (Drop 0.3 VDC @ 1 Amp)

All channels Scan rate: 1 ms

Analog Input Channels

Analog Input Range: 4-20 mA

A/D resolution 16 bits (0.003%) 10 bits (fast option)

Full scale accuracy: +/- 0.02% (at 20 °C, 16 bit mode)

Temperature coefficient +/- 50 ppm per °C (span and offset)

Input impedance (resistance): 100 ohms

Protection: Self-resetting short circuit protection fuses

DMRR (differential mode) 66 db at 50/60 Hz

Fastest update time [# of chan.]: 880 ms [all] -16-bit; 145 ms [all] -14-bit; 1 ms [2] -10-bit

Analog Output Channels

Analog output range: 4-20 mA, 0-20 mA, 0-5 VDC

D/A resolution 16 bits (less than 1 uA)

Full scale accuracy +/-0.02% (at 20°C); All ranges after calibration

4-20mA full scale accuracy +/-0.02% (at 20°C); Before calibration

0-20mA full scale accuracy +/-0.1% (at 20°C); Before calibration

Span and offset temp. +/- 50 ppm per °C typ.

Max. output settling time 5 ms (to .05%)

Max. Load resistance (@ 24 V) 750 Ohms

Max. Load resistance (@ 10V) 300 Ohms

Current limiting short circuit protection

0-5VDC full scale accuracy +/-0.5% (at 20°C); Before calibration

Min. load resistance (0-5VDC range): 20 KOhms

1.1.4 E2/EB-32DI24-D Specifications

Discrete Input Channels
Voltage range: 10 - 30 VDC
Input Polarity: Sourcing
Guaranteed ON voltage: 9 VDC
Guaranteed OFF voltage: 5.0 VDC
Guaranteed OFF current: 2 mA DC
Input resistance: 10 Kohms
Input current (@ 24 VDC) 3 mA
Input Protection: High Impedance with overvoltage protection
Channel 1 in high-speed mode has 150V isolation (terminals 43 and 44)
Filtered ON/OFF delay: 25 ms (20 Hz. max. counting rate)
Fastest response: 1 ms (400 Hz. max. counting rate)
Special fast counting rate: Up to 50 KHz on channels 1 and 2 (Chan 1 isolated, terms 43 and 44)
Pulse Counting Options: Count up, pulse timing and pulse rate 16 or 32 bit reporting
Scan rate (all channels) 1 ms

1.1.5 E2/EB-16DI24-D Specifications

Discrete Input Channels
Voltage range: 10 - 30 VDC
Input Polarity: Sourcing
Input isolation: 150 Volts (16 channel modules only)
Guaranteed ON voltage: 9 VDC
Guaranteed OFF voltage: 5.0 VDC
Guaranteed OFF current: 2 mA DC
Input resistance: 10 Kohms
Input current (@ 24 VDC) 3 mA
Input Protection: High Impedance with overvoltage protection
Filtered ON/OFF delay: 25 ms (20 Hz. max. counting rate)
Fastest response: 1 ms (400 Hz. max. counting rate)
Special fast counting rate: Up to 2 KHz on channels 1 and 2
Pulse Counting Options: Count up, pulse timing and pulse rate 16 or 32 bit reporting
Scan rate (all channels) 1 ms

1.1.6 ED-16DIAC-D Specifications

Environmental Specifications
Hazardous locations (Class 1, Div 2, Groups A, B, C, D) UL 1604, CSA C22.2/213 (Does not comply with Cenelec EN50021 Zone 2)

Discrete Input Channels
Voltage range E2-16DIAC-D: 60 - 140 VAC
Input Polarity: Sourcing
Input isolation: 150 Volts (16 channel modules only)
Guaranteed ON voltage: 55 VAC
Guaranteed OFF voltage: 35 VAC
Input resistance: 10 Kohms
Input Protection: High Impedance with overvoltage protection
Filtered ON/OFF delay: 25 ms (20 Hz. max. counting rate)
Fastest response: 25 ms (20 Hz. max. counting rate)

1.1.7 E2/EB-32DO24D Specifications

Discrete Output Channels
Output voltage range 10-30 VDC
Max. output power: 0.5 Amps per channel, 8A per module
Max. off state leakage: 0.01 mA (less than 10 uA)
Short circuit protection: self-reset fuses (trip above 1.5 Amp)
Min. load: 1 mA
Inrush current: 5 Amps (100 ms surge)
Typical on resistance: 0.3 Ohms (Drop 0.3 VDC @ 1 Amp)
All channels Scan rate: 1 ms

1.1.8 E2/EB-16DO24D Specifications

Discrete Output Channels
Output voltage range 10-30 VDC
Max. output power: 1A Per channel, 16A per module, .8A at 60°C 8 channels at 24 VDC
Max. off state leakage: 0.01 mA (less than 10 uA)
Short circuit protection: self-reset fuses (trip above 1.5 Amp)
Min. load: 1 mA
Inrush current: 5 Amps (100 ms surge)
Typical on resistance: 0.3 Ohms (Drop 0.3 VDC @ 1 Amp)
Input isolation: 150 Volts (16 channel modules only)
All channels Scan rate: 1 ms

1.1.9 E2/EB-16DORLY-D Specifications

Discrete Output Channels
Output voltage range 10-30 VDC/AC
Relay Type: 14 NO (Form A) and 2 NO/NC (Form C)
Max. output power: 1A per channel up to 50C, 0.8A per channel from 50°C to 60°C, 0.7A per channel from 60°C to 75°C
Max. off state leakage: 0.01 mA (less than 10 uA)
Short circuit protection, self-reset fuses (trip above 1.5 Amp)
Min. load: 1 mA
Inrush current: 5 Amps (100 ms surge)
Typical on resistance: 0.3 Ohms (Drop 0.3 VDC @ 1 Amp)
Input isolation: 150 Volts (16 channel modules only)
All channels Scan rate: 1 ms

1.1.10 E2/EB-32AI20M-D Specifications

Analog Input Channels
Analog Input Range: 4-20 mA
A/D resolution 16 bits (0.003%) 10 bits (fast option, Channels 1 and 2 only)
Full scale accuracy +/- 0.02% (at 20°C, 16 bit mode)
Temperature coefficient +/- 50 ppm per °C (span and offset)
Input impedance (resistance): 100 ohms
Protection: Self-resetting short circuit protection fuses
DMRR (differential mode) 66 db at 50/60 Hz
Fastest update time [# of chan.]: 880 ms [all] -16-bit; 145 ms [all] -14-bit; 1 ms [2] -10-bit

1.1.11 E2/EB-32AI10V-D Specifications

Analog Input Channels
Analog Input Range: 0 to +10 VDC
A/D resolution 16 bits (0.003%)
Full scale accuracy +/- 0.02% (at 20°C, 16 bit mode)
Temperature coefficient +/- 50 ppm per °C (span and offset)
Input impedance (resistance): 200 Kohms
DMRR (differential mode) 66 db at 50/60 Hz
Fastest update time [# of chan.]: 880 ms [all] -16-bit; 145 ms [all] -14-bit; 1 ms [2] -10-bit

1.1.12 E2/EB-16AI20M Specifications

Analog Input Channels
Analog Input Range: 4-20 mA
A/D resolution: 16 bits (0.003%), 10 bits (fast option, Channels 1 and 2 only)
Full scale accuracy +/- 0.02% (at 20°C, 16 bit mode)
Temperature coefficient +/- 50 ppm per °C (span and offset)
Input impedance (resistance): 100 ohms
Protection: Self-resetting short circuit protection fuses
DMRR (differential mode) 66 db at 50/60 Hz
Fastest update time [# of chan.]: 880 ms [all] -16-bit; 145 ms [all] -14-bit; 1 ms [2] -10-bit

1.1.13 E2/EB-16ISO20M-D Specifications

Analog Input Channels	
Analog Input Range: 4-20 mA	
A/D resolution 16 bits (0.003%)	
Full scale accuracy +/- 0.02% (at 20 °C, 16 bit mode)	
Temperature coefficient +/- 50 ppm per °C (span and offset)	
Input impedance (resistance) 100 ohms	
Protection: Self-resetting short circuit protection fuses	
DMRR (differential mode) 66 db at 50/60 Hz	
Fastest update time: 200 ms	
Common mode input voltage:	Between two input terminals +/- 60 VDC Between inputs and ground 300 volts

1.1.14 E2/EB-16ISOTC-D Specifications

Analog Input Channels	
Analog Input Ranges: +/-250 mV, Thermocouples supported J,K,E,R,T,B,L,N & S	
A/D resolution 16 bits (0.003%)	
Full scale accuracy +/- 0.02% (at 20 °C, 16 bit mode)	
Temperature coefficient +/- 50 ppm per °C (span and offset)	
Input impedance (resistance): 200 Kohms	
DMRR (differential mode) 66 db at 50/60 Hz	
Fastest update time (all 16 channels): 8 ms	
Accuracy typical uncalibrated +/- 0.5 °C	
Common mode input voltage:	Between two input terminals +/- 60VDC Between inputs and ground 300 volts

1.1.15 E2/EB-10RTD-D Specifications

Serial Ports
RS485 port, Screw terminals (485+, 485-, GND) (2-wire half-duplex, isolated)
Isolations voltage, 150V
RS485 networking, Up to 32 (full-load) stations
RS485 distance, Up to 0.5 miles (baud rate dependent)
Baud Rates from 150 to 57,600 baud
Protocols: master and slave: Sixnet and Modbus RTU / ASCII
Diagnostic LEDs: Transmit (TD) and Receive (RD)

Analog Input Channels
RTD input range: -200-850 °C
RTD overall accuracy: .05% or .5 °C
A/D resolution 16 bits (0.003%)
Temperature coefficient +/- 50 ppm per °C (span and offset)
RTD Type: 100 Ohm Platinum
RTD Alpha: .00385 or .00392
RTD Connections: 2 or 3-wire
Scan time: 550 ms for all 10 channels
Max lead wire resistance: 100 Ohms per side balanced
RTD excitation current: 250uA pulsed to reduce self-heating

1.1.16 E2/EB-16AI8AO-D Specifications

Analog Input Channels
Analog Input Range: 4-20 mA
A/D resolution: 16 bits (0.003%), 10 bits (fast option, Channels 1 and 2 only)
Full scale accuracy +/- 0.02% (at 20 °C, 16 bit mode)
Temperature coefficient +/- 50 ppm per °C (span and offset)
Input impedance (resistance): 100 ohms
Protection: Self-resetting short circuit protection fuses
DMRR (differential mode) 66 db at 50/60 Hz
Fastest update time [# of chan.]: 880 ms [all] -16-bit; 145 ms [all] -14-bit; 1 ms [2] -10-bit

Analog Output Channels
Analog output range: 4-20 mA
D/A resolution 16 bits (less than 1 uA)
Full scale accuracy +/-0.02% (at 20°C)
Span and offset temp. +/- 50 ppm per °C typ.
Max. output settling time 5 ms (to .05%)
Load resistance (@ 24 V) 0-750 Ohms
Load resistance (@ 10V) 300 Ohms
Current limiting short circuit protection

1.1.17 E2/EB-8AO20M Specifications

Analog Output Channels
Analog output range: 4-20 mA
D/A resolution 16 bits (less than 1 uA)
Full scale accuracy +/-0.02% (at 20°C)
Span and offset temp. +/- 50 ppm per °C typ.
Max. output settling time 5 ms (to .05%)
Load resistance (@ 24 V) 0-750 Ohms
Load resistance (@ 10V) 300 Ohms
Current limiting short circuit protection

1.2 Red Lion Software Tools

Red Lion supplies the "mission oriented" tools you need for every step of your project from the initial specification, through startup, to years of trouble free operation. Configuration information flows between Red Lion Windows, saving you time (you don't have to enter data multiple times) and dramatically reducing data entry errors. Refer to the on-line help in the Sixnet I/O Tool Kit for complete details.

Web Server

An embedded web server within the I/O module may also be used for configuration, calibration and maintenance of this device. Refer to Section 9 of this manual for further information.

Sixnet I/O Tool Kit

The Sixnet I/O Tool Kit is a configuration, calibration and maintenance tool for Red Lion hardware. It is the preferred method of configuring I/O modules when the module will be an integral part of a Red Lion project under the control of a Red Lion RTU or process controller. The Tool Kit software provides project wide error checking and design automation features that will save you time on large projects. Further information can be found in the I/O Tool Kit online help.

OPC or DDE

Kepware or other commercial OPC (OLE for Process Control) and embedded device communication driver packages that support Sixnet or Modbus protocol generally provide access to Windows applications via OPC and/ or DDE (Dynamic Data Exchange) protocols. An OPC/DDE server allows any Windows OPC/DDE client application to access Red Lion I/O registers directly over Ethernet or serial ports.

There are two Kepware servers available: KepServer and KepServerEx. When an OPC command is received by the KepServer, it sends the appropriate Modbus RTU protocol command over a serial port or Ethernet to the remote station or module. The KepServerEx functions in the same manner, but it sends Sixnet Universal protocol instead of Modbus RTU protocol. The I/O registers are referenced by the tag names assigned using the Red Lion I/O Tool Kit Windows software.

1.3 Getting Started with Red Lion Hardware

Following the steps below will make installation and start-up easier.

1. Mount the Hardware.

   If you purchased individual components, consult section 2 of this manual or other appropriate user manual for information on installing them into an enclosure.

2. Connect Power and I/O

   Connect AC power cables from a suitable power source to the 24V DC power supply. The DC power connections are then attached to the Ethertrak-2 module bases as outlined in Chapter 4. Make field wiring connections to the Red Lion I/O modules terminal connector strip and any peripheral equipment. Refer to the appropriate module and remote equipment user manuals for I/O connection details.

3. Install Communication Wiring to I/O Modules

   Make the necessary Ethernet, USB, or RS485 communication connections to any EtherTRAK-2 I/O modules. Install the appropriate Ethernet, USB, and/or RS485 cabling between the Red Lion equipment and to your master I/O polling device. Fabricate and install RS485 cables as needed to connect to other devices.

4. Configure Network Mode and DI COM Jumpers

   Detach the module from the base by unlatching the red module locking tabs, located on the top and bottom edges of the module. Configure the network and discrete input jumpers accordingly as is detailed in Chapter 3. Replace the module and push in the locking tabs.

5. Apply Power

   Apply power. Observe the status (OK) LED on each unit. Typically a solid ON indicates proper operation. A blinking LED may indicate that the unit needs to be configured. Chapter 8 provides details on the LED status lights.

6. Configure Using the Web Server or I/O Tool Kit Windows Software

   Application-specific configuration choices may be made by using the web server embedded with the I/O module or through the I/O Tool Kit software.

7. Test the Hardware

   Use the Test I/O window in the I/O Tool Kit software or the Web Server to verify proper I/O operation of all Red Lion stations. Refer to the I/O Tool Kit or web server on-line help system for further instructions.

8. Configure Your I/O Master to Communicate with the Red Lion station(s)

   Communication between these I/O modules and your intended I/O master is beyond the scope of this manual.

9. If You Have Difficulty

   If you experience startup trouble, go to the Getting Started icon in the I/O Tool Kit online help for some trouble-shooting tips or go to www.redlion.net. If you still need assistance then please contact Red Lion at 1-877-432-9908.

1.4 USB Installation Instructions

To use the USB, please follow the instructions below.

1. Run the sxusb.exe install
   - The USB driver will automatically be installed when the Tool Kit configuration utility is installed.
2. Connect the Dual Ethernet module to the PC
   - Once the USB device is connected the hardware installation wizard will appear. Select "No, not this time" and click Next.
   - On the next screen, select "Install the software automatically", and click Next.

- The computer will locate the driver and confirm that you would like to install the unverified driver. Select “Continue Anyway” and click “Finish” to complete the installation.

3. View the USB COM port number

- To view the COM port the USB device has been assigned to, open the Windows Device Manager. Expand the section for Ports (COM & LPT) and locate the port labeled "Dual Ethernet USB Serial Device".

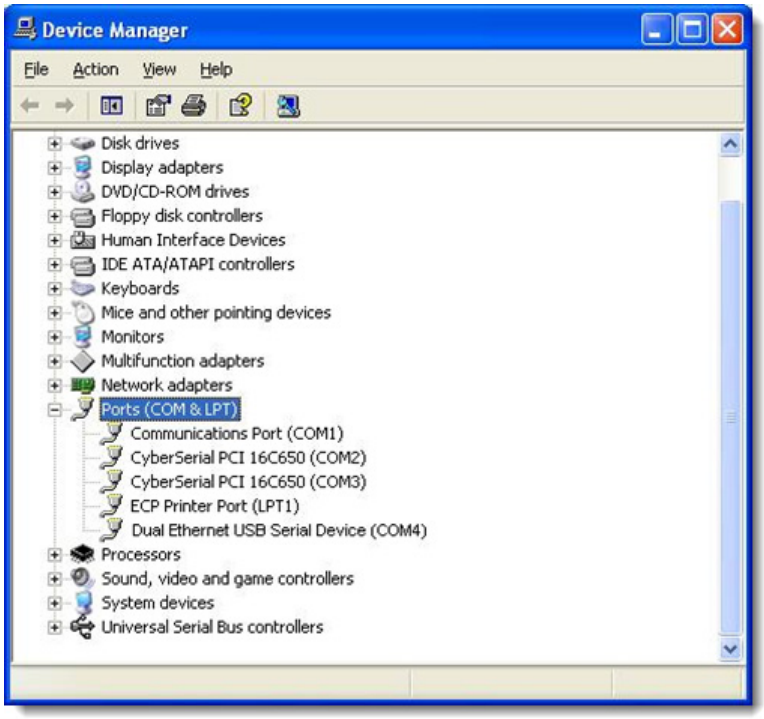

Chapter 2 Assembly and Instruction

2.1 Panel Assembly

Most Red Lion components snap onto DIN rail strips fastened to a subpanel. Two red-colored snaps, located on the bottom of the module's base subassembly, are available for quick and easy DIN rail mounting. One snap allows for vertical mounting orientation, the other for horizontal mounting. The I/O Module is approximately 5.5" high and 3.5" wide (refer to the Mechanical Dimensions diagram, Figure 2-1 below).

Arrange the enclosure layout to suit your application. Like EtherTRAK-2 I/O, other Red Lion components can be installed in any orientation and order on your panel. The Red Lion components are typically installed against one another, but space may be left between modules to accommodate other DIN rail mounted components such as terminal blocks and fuse holders. End clamps are recommended to restrict side-to-side movement. Be sure to allow ample space between DIN rails for wire ducts.

For most EtherTRAK-2 base I/O and power screw terminal sizes used on Red Lion products are M3 and can support wire sizes of 30-12AWG. The recommended torque is 5 IN/LB.

The exception to this is the E2-16ISOTC-D I/O wiring. The screw terminal sizes are M2 and can support wire sizes of 30-16AWG. The recommended torque is 1.5 IN/LB.

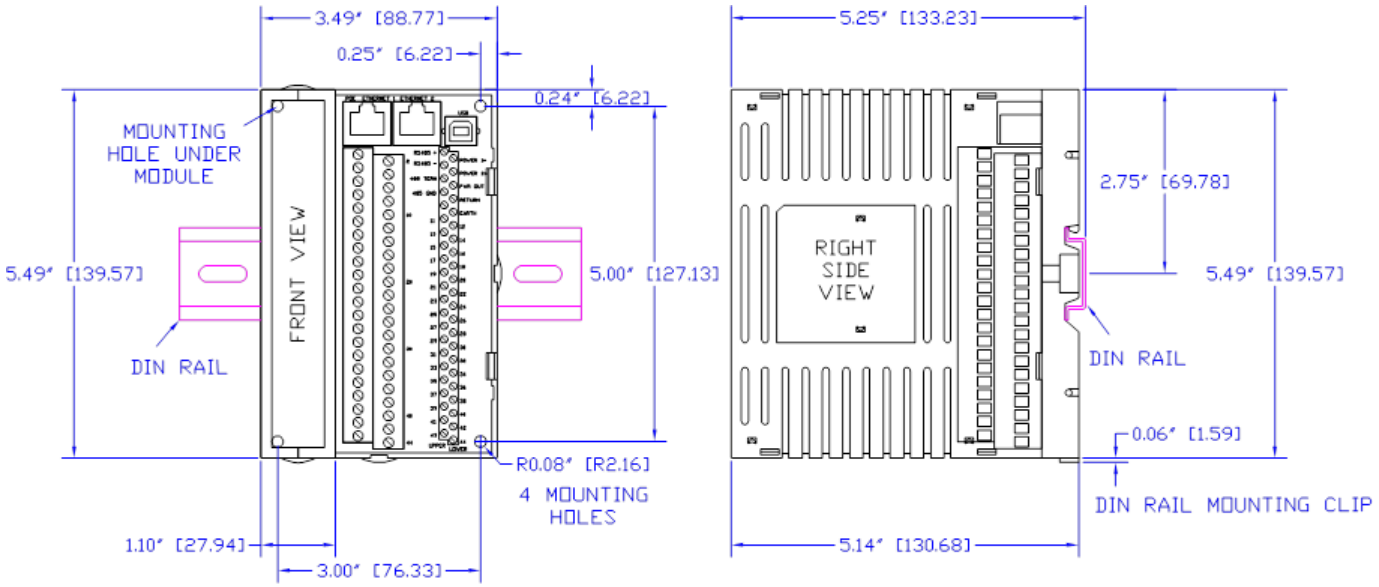

2.2 Replacing the Logic Module

The logic module can be removed from the base in a system that is powered on (hot-swap). The module maybe removed and replaced with another one for troubleshooting or repair/replacement purposes. To remove the module first open the lock tabs on the top and bottom of the module as show in the picture below. Next, pull on the module from the middle as show in the picture below. To replace the module reverse this process.

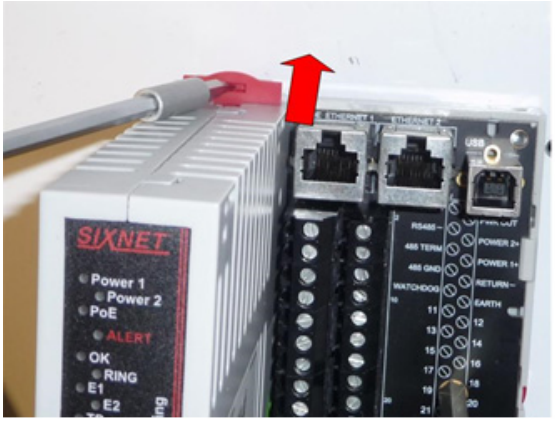

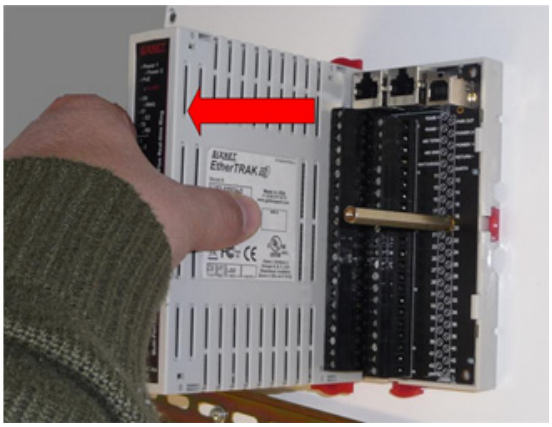

2.3 Base Cover

The screw terminals and communication ports may be covered by the base covered. The base cover is included with every module and must be used to comply with CE. To adjust the size of the holes for the wiring cot out the punch-out boxes with a sharp knife.

Note: Do not attempt to push the punch-out boxes with hand.

Chapter 3 Jumper Settings

3.1 Setting the Network Jumper

This jumper sets the network configuration for the two ("dual") Ethernet ports.

Network Mode Jumper Location

The Network Mode jumper is located on the wiring base assembly. To locate the jumper, you must first remove the I/O module from the wiring base. To do this, you must first unsnap the two red-colored quick-lock tabs located at each end of the module using a small flat-tip screw driver. Carefully pull the module from the base to reveal the Network Mode jumper.

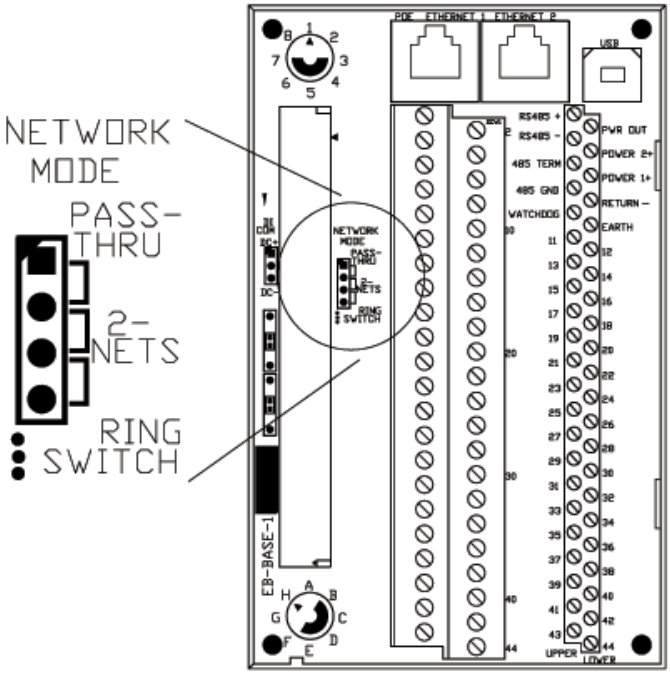

IMPORTANT: *Before connecting the I/O Module to an Ethernet network, it is necessary to first set the Network Mode jumper to insure that unwanted connection paths are not created.*

NOTE: The jumper is located on the base so that the replacement of a module or inadvertent change in configuration will not adversely affect the network.

Network Mode

This jumper sets network configuration for the two (or "dual") Ethernet ports on the base. One of three modes can be set:

Pass-Thru (Ethernet Message Pass-thru)	An unmanaged switch in the module passes Ethernet traffic between the ports. This option allows I/O modules to be daisy-chained without the need for external Ethernet switches.
Ring	This option allows the two Ethernet ports to act as Real-time Ring™ switch ports. This mode should only be used if this module will be placed in a closed ring consisting of other similarly configured I/O modules, and Real-time Ring™ switches. IMPORTANT: When switching to and from Ring mode you must make sure the modules are not connected in a closed loop. If a loop is present when ring mode is disabled it may be adversely affect the performance of your network.
Two Networks	In this option, traffic is blocked between the two Ethernet Ports so that the I/O module can be connected to two independent networks. Each Ethernet port has a separate MAC address and requires its own IP address.

Choose the desired mode and set the jumper accordingly. Reassemble the module subassembly to the base subassembly. The jumper is located on the base so that the replacement of a module or inadvertent change in configuration will not adversely affect the network.

NOTE: If the jumper is missing, the jumper setting in the base defaults to the "Two Networks" mode, because this is the least likely to cause network problems.

Configuring the Network ("Dual Ethernet") Mode

Using the I/O Tool Kit Windows configuration software or the web server embedded into the I/O module, access the configuration pages and select the Ethernet configuration page. In the "Dual Ethernet Mode" drop down menu, select the mode that matches the jumper setting that has been set in the wiring base. Chapter 7 of this document has additional information on configuration.

NOTE: The default communication mode is to follow the jumper, so initial set up does not require configuration. When the setting is set to something other than follow the jumper the setting must match the jumper setting; otherwise there will be a conflict on the network.

3.2 Setting the DI COM Jumper

The Discrete Input Common ("DI COM") jumper sets a select number of discrete input circuits as either "Sourcing" or "Sinking" on certain types of modules only (as listed below). All 32 inputs are Sourcing (by default) and the first 8 channels can be Sinking (by jumper). The number of inputs affected by this setting will vary by module type:

Part Number (Module w/Base)	Total # of Discrete Ins	Group of DI allocated for Sourcing or Sinking	Screw Terminals
E2/EB-MIX24880-D	24	First 8	11 through 18
E2/EB-MIX24882-D	24	First 8	11 through 18
E2-MIX20884-D	20	Channels 5-12	17 through 24
E2/EB-32DI24-D	32	All 32*	11 through 42
**** All 32 inputs available for Sourcing***			

NOTE: This jumper is not applicable on other EtherTRAK-2 I/O modules that offer individually isolated discrete inputs (such as the E2-16DI24 and E2-16DIAC modules) where sinking or sourcing can be wired on individual input pairs.

IMPORTANT: *Before connecting and powering up the I/O Module, it will be necessary to first set the "DI COM" jumper.*

DI COM Jumper Location

The DI COM jumper is located on the base subassembly. To locate the jumper, you must first remove the module subassembly from the base subassembly. To do this, you must first unsnap the two red-colored quick-lock tabs using a small flat-tip screw driver. Carefully pull the module from the base to reveal the DI COM jumper.

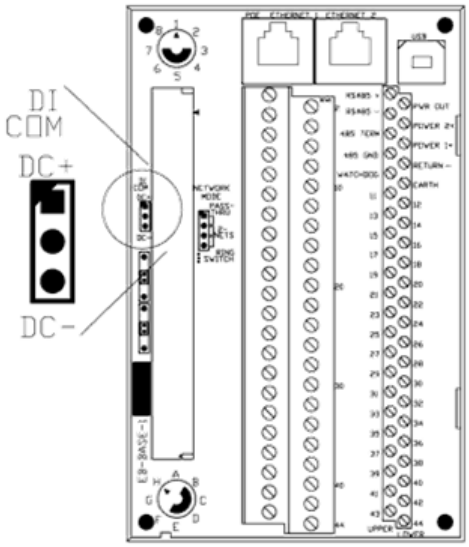

NOTE: The DI COM jumper is located on the base so that the replacement of a module or inadvertent change in configuration from the web server or I/O Tool Kit software will not adversely affect the power wiring on the affected inputs.

Determine Sinking or Sourcing Mode

The default jumper setting is sourcing (jumper to "DC-") which is appropriate for most situations in which a positive voltage is applied to an input to indicate an "ON" condition. Select Sinking (jumper to "DC+") for "ON" inputs corresponding to ground closures that require a positive reference as an opposing return connection. (See both jumper circuits below.)

Choose the mode that fits your application and set the jumper accordingly. Reassemble the module subassembly to the base subassembly.

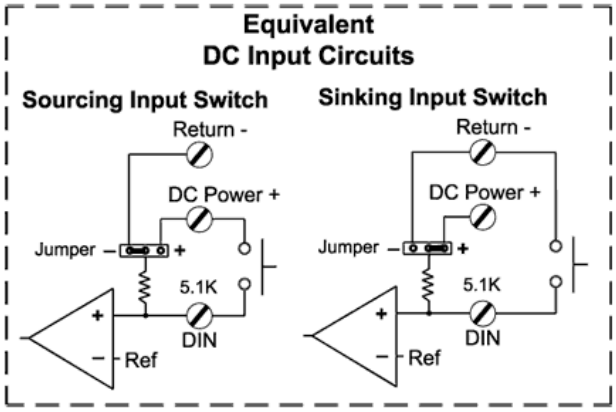

Configuring the Module for Sinking and Sourcing

Once the module is reinstalled and power is applied, the module will automatically read the DI COM jumper setting and configure the module accordingly.

If you are configuring the module from the web server, you can view the jumper setting from the "Discrete Options" configuration page. Note that the parameter "Source/Sink mode" will display the corresponding jumper setting as "Sink" or "Source".

If you are configuring the module from the I/O Tool Kit Windows software, in the Discrete Options configuration screen, in the "Source/Sink mode" drop down menu, select the mode that matches the jumper setting, otherwise a conflict will arise on the affected discrete inputs. The "Follow the Jumper" selection will tell the firmware to use the setting as it is set in the hardware jumper. Otherwise this configuration setting should match what the hardware jumper is set to.

3.3 RS485 Jumper on the E2-MIX20884-D Base

On the E2-MIX20884-D module has a jumper to set the RS485 termination instead of the "TERM" screw terminal on the other EtherTRAK-2 bases. The "storage" position should be used when termination is not required on the RS485 port. When a termination is used on the RS485 network and the EtherTRAK-2 is one of the end points the jumper should be put into the "termination" position. See below for a diagram of the jumper and RS485 equivalent circuit.

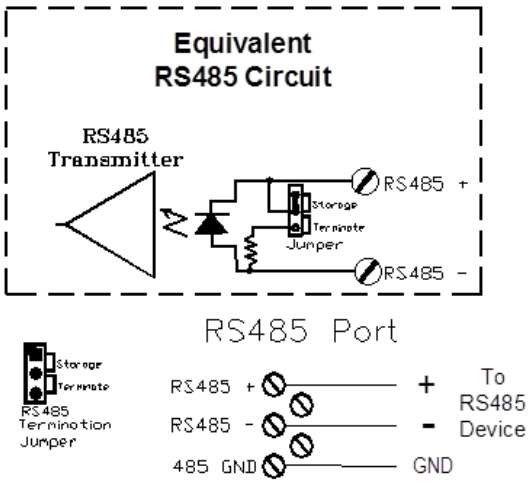

Chapter 4 Power Wiring Alternatives

4.1 Power Requirements

Modules may be powered from any suitable DC power source of 10 to 30 VDC. Most frequently, EtherTRAK-2 I/O modules are powered from a +24 VDC industrial rated power supply such as the Red Lion ET-PS-024-02 (2 Amp) or ST-PS-024-05 (5 Amp).

4.2 Current Requirements

To calculate the supply current requirements, add the wattage required for the Red Lion and other units in use. Next, divide the total wattage by the DC power source voltage. Then, add any current needed for user instrumentation loops and output loads.

4.3 Power Wiring

There are five screw terminals associated with powering the module:

Signal	**Screw Terminal**		**Description**
	Most E2s	**E2-MIX20884-D only**	
Power Out	Screw #2	Not used	+24 VDC output power on POE powered Etherbus modules only. POE power internally supplies power to module intelligence, communications, and inputs. A jumper is required from screw terminal #2 to screw #6 to power discrete outputs.
Power 2+	Screw #4	Screw #2	Positive power input provides redundant power for the module intelligence, communications and all inputs and analog outputs. Please note that this screw terminal will not power discrete outputs.
Power 1+	Screw #6	Screw #4	Positive power connection to operate all module intelligence, communication and all inputs and output I/O channels
Return -	Screw #8	Screw #6	Power supply negative return - common to all internal functions except individually isolated I/O channels on some modules.
Earth	Screw #10	Screw #8	Earth ground connection. Tied to metal case on Ethernet and USB connectors on the wiring base.

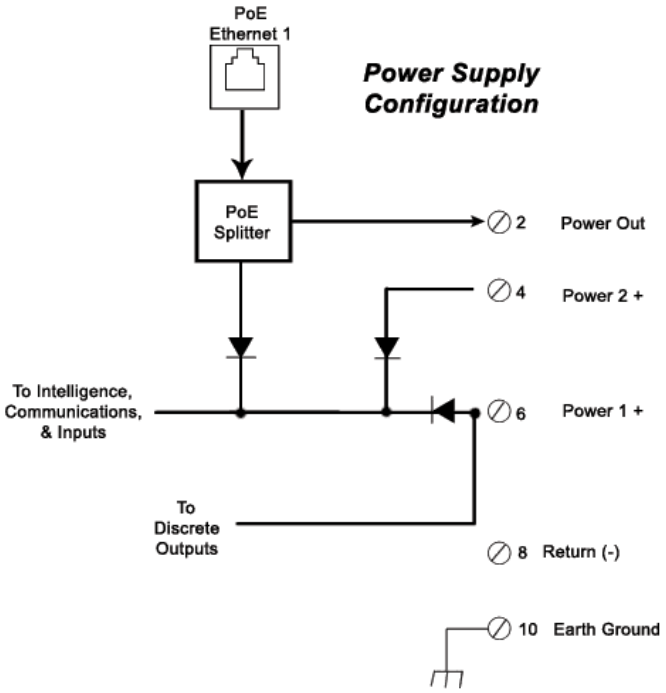

4.4 Etherbus PoE Option

Etherbus I/O provides the capability to utilize Power over Ethernet (PoE) to power the I/O module and associated instrumentation directly from the Ethernet cable.

Etherbus PoE Power - PoE power supplied to Ethernet port #1 will power the module's intelligence, communication and input channels as well as supply +24 VDC power for external loads. Note: A jumper is required from screw #2 to screw #6 to power outputs from the PoE power source. When the PoE supply is used and power provided, an LED light on the I/O module will be lit to confirm the connection.

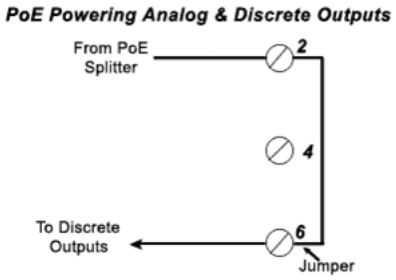

Uninterruptible Power Protection

Supply backup power from a central location to each distributed Etherbus I/O module using a single Etherbus Fieldbus cable.

This PoE supply provided by an independent power supply will keep the module communicating and even power critical instrumentation in the event of a local power failure. Apply local (primary power to screw terminal #6 (Power 1+) to

power all module functions. The backup power will not attempt to operate outputs but will keep communication running so that input status remains available in the event of local power failure. Use power from the power output screw terminal to keep instrumentation loops active in the event of local (primary) power failure.

4.5 Base Power and Communication Wiring Diagram

The diagram below details the base subassembly which is common to all products in the EtherTRAK-2 I/O Module family. The power and RS485 wiring (screw terminals 1 through 10; see below base diagram) are also common to most products in the family (E2-MIX20884-D has a slightly different power and RS485 wiring).

Most EtherTRAK-2 modules Power and RS485 Wiring			
Upper Row		Lower Row	
Term #	**Function**	**Term #**	**Function**
1	RS485(+)	2	Power Out (+)
3	RS485(-)	4	Power In_2 (+) (Does not power DO and AO)
5	RS485-Term	6	Power In_1 (+) (Power all module functions)
7	RS485-Gnd	8	Power Ground
9	Watchdog Output	10	Earth Ground

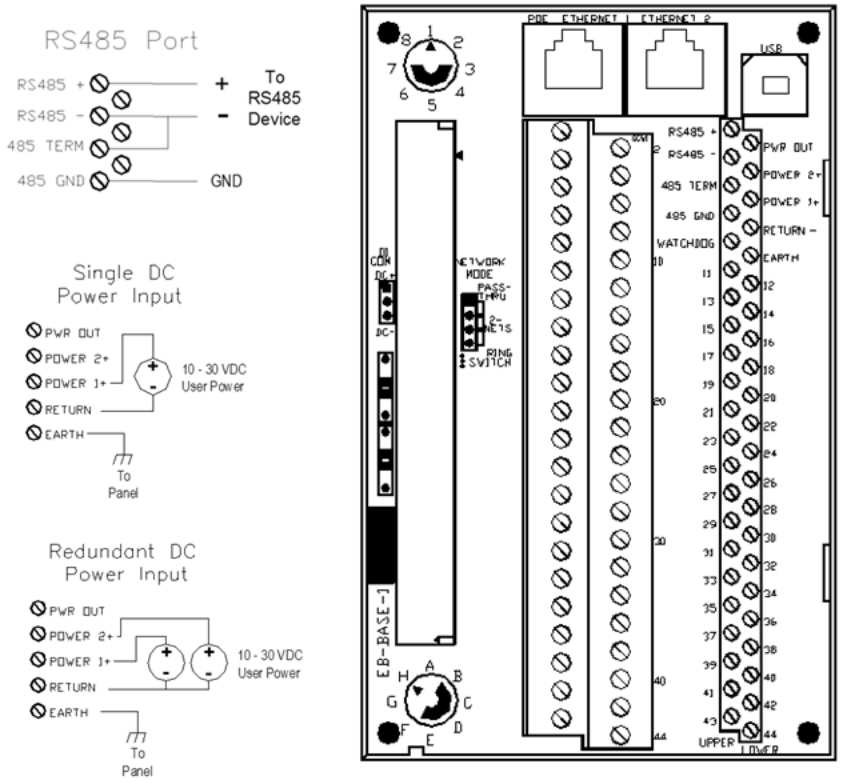

E2-MIX20884-D Power and RS485 Wiring			
Upper Row		Lower Row	
Term #	**Function**	**Term #**	**Function**
1	RS485(+)	2	Power In_2 (+) (Does not power DO and AO)
3	RS485(-)	4	Power In_1 (+) (Power all module functions)
5	RS485-Gnd	6	Power Ground
7	Watchdog Output	8	Earth Ground

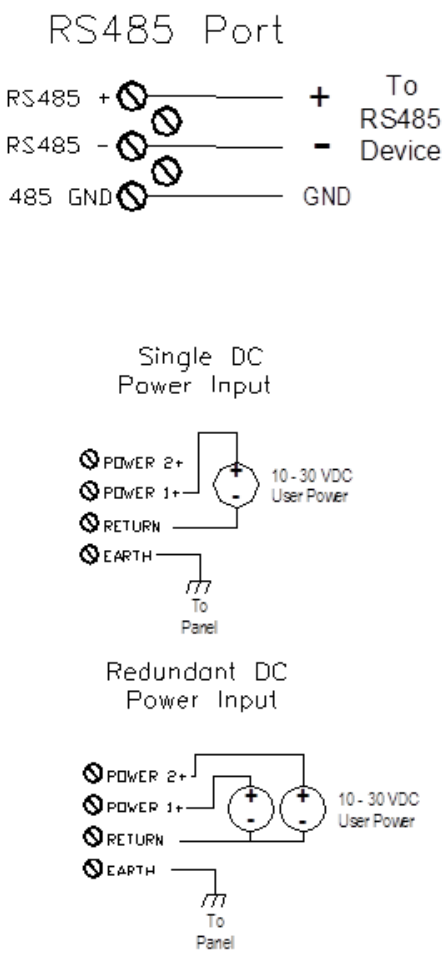

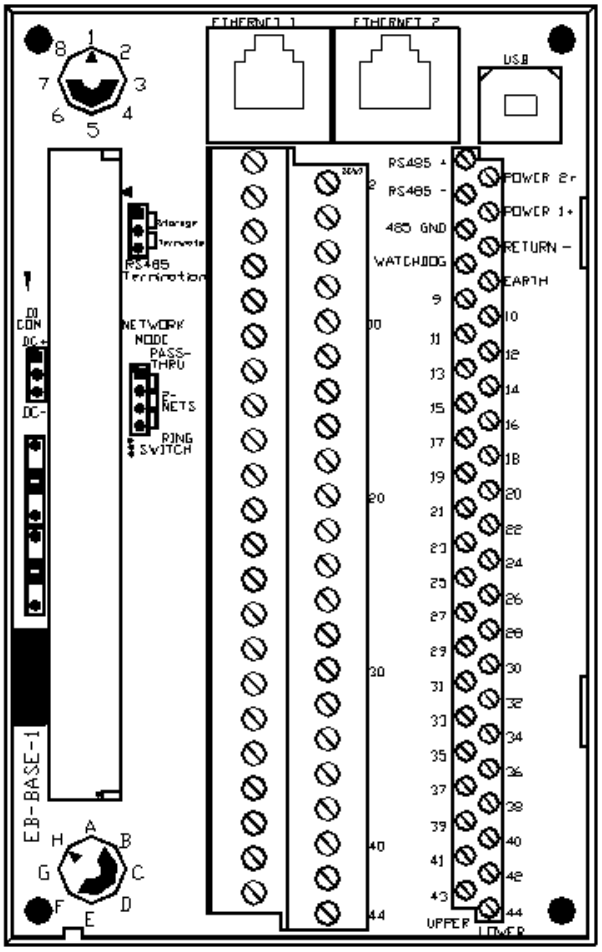

Chapter 5 Module Wiring / Screw Terminal Assignments

5.1 Screw Terminal Guidelines

The screw terminals used on the E2-BASE-1 can accept 30 to 12 AWG wire. The screw size is M3 and the recommended torque is 5 IN/LB.

The screw terminals used on the E2-BASE-TC-1(used in E2-16ISOTC-D only) can accept 30 to 16 AWG. The screw size is M2 and the recommended torque is 1.5 IN/LB.

5.2 Typical I/O Wiring

The sample wiring diagram below is mostly applicable for the combination I/O modules (E2/EB-MIX24880-D and E2/EB-MIX24882-D). The I/O wiring for discrete and analog inputs is representative of most other I/O modules. Isolated I/O wiring used in the E2/EB-16DI24-D, E2/EB-16DIAC-D and E2/EB-16DI24-D are also included.

NOTE: The upper and lower screw terminal assignments for the E2-MIX-24882-D are shown in this diagram as an example. For detailed information on Screw Terminal Assignments for this and all other module types, consult the tables below or the help files in either the I/O Tool Kit software or the module's web server.

Screw Terminals (11 - 44) for Specific Modules (9 - 44 for E2-MIX20884)

The table below lists the available I/O modules. Click on the link (right column), or turn to pages 37-45, to display the associated Screw Terminal Assignment table.

Part Number E2/EB-	DI	DO	AI	AO	Description	Link to Screw Terminal Assignment Table
MIX24880	24	8	8		Double density combination I/O (see Note 1)	Table A
MIX24882	24	8	8	2	Double density combination I/O w/2 AOs (see Note 1)	Table A
MIX20884	20	8	8	4	Combination I/O w/ 4 HSDIs and 4AOs (See Note 2)	Table I
32DI24	32				32 inputs double density	Table B
16DI24	16				Isolated channels, 10-30 VDC/VAC	Table C
16DIAC	16				Isolated channels, 120 VAC nominal	Table C
32DO24		32			32 outputs double density	Table B
16DO24		16			Isolated channels	Table C

16DORLY		16			Isolated low-voltage relays	Table H
32AI20M			32		4-20 mA double density fused inputs	Table B
32AI10V			32		Voltage Inputs (other ranges are available as special order)	Table B
16AI20M			16		4-20 mA high density fused inputs	Table D
8AO20M				8	4-10 mA analog outputs	Table D
16AI8AO			16	8	16 inputs, 8 outputs (4-20 mA) range	Table D
10RTD			10		10 2-3 wire inputs	Table E
16ISOTC			8/16		8 or 16 isolated thermocouple and millivolt inputs	Table F
16ISO20M			16		16 isolated analog inputs	Table G

NOTES

1. 24 maximum DI's are listed, 8 of which can be configured as either DI or DO.
2. Modules listed may include an optional Etherbus® Power over Ethernet (PoE) feature (EB-).

Address definitions listed in the table below:

X	Discrete Input (Din) registers	AX	Analog Input (AIN) registers
Y	Discrete Output (Dout) registers	AY	Analog Output (Aout) registers
CNT	Discrete Counter Input		

5.2.1 Table A Modules E2/EB-MIX24880 and MIX24882

Module E2/EB-MIX24880-D adn e2/EB-MIX24882-D screw terminal assignment.

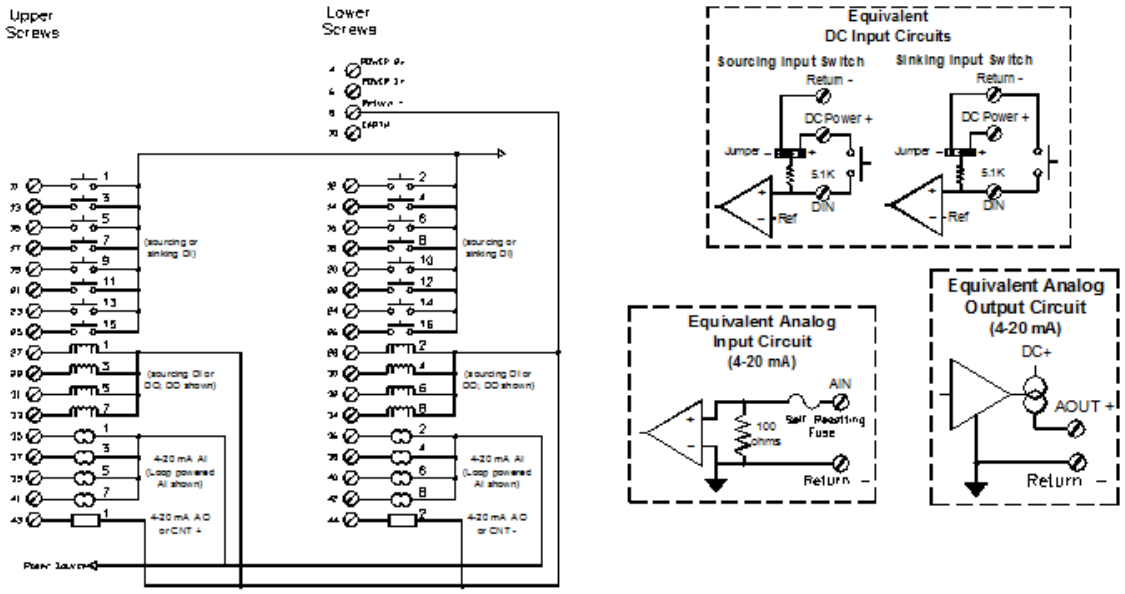

Upper Row		Lower Row	
Term #	**Function**	**Term #**	**Function**
11	X0 – Din 1	12	X1 - Din 2
13	X2 - Din 3	14	X3 - Din 4
15	X4 - Din 5	16	X5 - Din 6
17	X6 - Din 7	18	X7 - Din 8
19	X8 - Din 9	20	X9 - Din 10
21	X10 - Din 11	22	X11 - Din 12
23	X12 - Din 13	24	X13 - Din 14
25	X14 - Din 15	26	X15 - Din 16
27	*X16 - Din 17, Y0 - Dout 1	28	*X17 - Din 18, Y1 - Dout 2
29	*X18 - Din 19, Y2 - Dout 3	30	*X19 - Din 20, Y3 - Dout 4
31	*X20 - Din 21, Y4 - Dout 5	32	*X21 - Din 22, Y5 - Dout 6
33	*X22 - Din 23, Y6 - Dout 7	34	*X23 - Din 24, Y7 - Dout 8
35	AX0 - Ain 1	36	AX1 - Ain 2
37	AX2 - Ain 3	38	AX3 - Ain 4
39	AX4 - Ain 5	40	AX5 - Ain 6
41	AX6 - Ain 7	42	AX7 - Ain 8
43	AY0 (MIX24882 only) or CNT0+ which is read as AX8 (MIX24880 only)	44	AY1 (MIX24882 only) or CNT0- read as AX8 (MIX24880 only) **Note:** The counter input is an isolated differential pair.)

* Specifically in the E2-MIX2480 and E2-MIX24882, power to I/O module and power to combination discrete inputs/outputs should be from the same power source. See the Combination DI/DO section in Chapter 6 for more information.

5.2.2 Table B Modules 32DI24, 32DI24, 32AI20M, 32AI10V

High Density discrete and analog input module screw terminal assignment.

E2/EB-32DI24-D

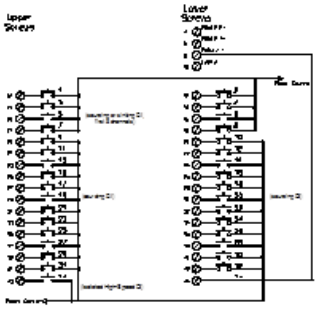

E2/EB-32DO24-D

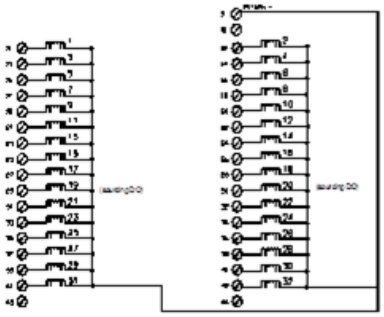

E2/EB-32AI20, -32AI10V-D

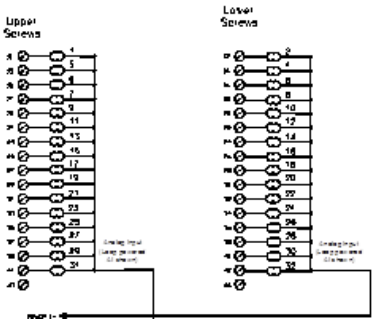

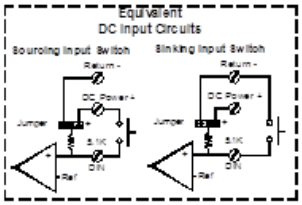

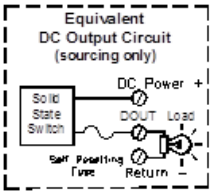

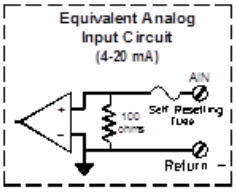

Upper Row		Lower Row	
Term #	**Function**	**Term #**	**Function**
11	X0, Y0 or AX0 - Channel 1	12	X1, Y1 or AX1 - Channel 2
13	X2, Y2 or AX2 - Channel 3	14	X3, Y3 or AX3 - Channel 4
15	X4, Y4 or AX4 - Channel 5	16	X5, Y5 or AX5 - Channel 6
17	X6, Y6 or AX6 - Channel 7	18	X7, Y7 or AX7 - Channel 8
19	X8, Y8 or AX8 - Channel 9	20	X9, Y9 or AX9 - Channel 10
21	X10, Y10 or AX10 - Channel 11	22	X11, Y11 or AX11 - Channel 12
23	X12, Y12 or AX12 - Channel 13	24	X13, Y13 or AX13 - Channel 14
25	X14, Y14 or AX14 - Channel 15	26	X15, Y15 or AX15 - Channel 16
27	X16, Y16 or AX16 - Channel 17	28	X17, Y17 or AX17 - Channel 18
29	X18, Y18 or AX18 - Channel 19	30	X19, Y19 or AX19 - Channel 20
31	X20, Y20 or AX20 - Channel 21	32	X21, Y21 or AX21 - Channel 22
33	X22, Y22 or AX22 - Channel 23	34	X23, Y23 or AX23 - Channel 24
35	X24, Y24 or AX24 - Channel 25	36	X25, Y25 or AX25 - Channel 26
37	X26, Y26 or AX26 - Channel 27	38	X27, Y27 or AX27 - Channel 28
39	X28, Y28 or AX28 - Channel 29	40	X29, Y29 or AX29 - Channel 30
41	X30, Y30 or AX30 - Channel 31	42	X31, Y31 or AX31 - Channel 32
43	CNT0 (AX0+) (Discrete in module only.)	44	CNT0 (AX0-) (Discrete in module only. The counter input is an isolated differential pair.

5.2.3 TABLE C Modules 16DI24, 16DIAC, 16DO24

16 Channel Discrete I/O Module screw terminal assignment

Note: These modules have individually isolated I/O and therefore two screw terminals per channel.

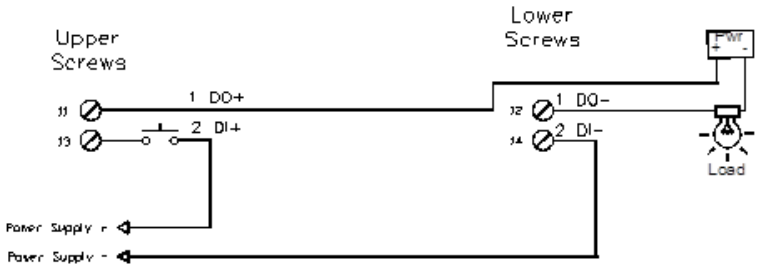

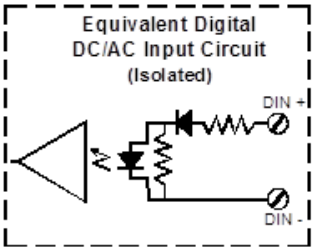

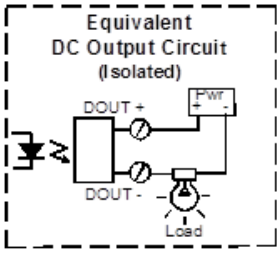

Upper Row		Lower Row	
Term #	**Function**	**Term #**	**Function**
11	X0 or Y0 - Channel 1 (+)	12	X0 or Y0 - Channel 1 (-)
13	X1 or Y1 - Channel 2 (+)	14	X1 or Y1 - Channel 2 (-)
15	X2 or Y2 - Channel 3 (+)	16	X2 or Y2 - Channel 3 (-)
17	X3 or Y3 - Channel 4 (+)	18	X3 or Y3 - Channel 4 (-)
19	X4 or Y4 - Channel 5 (+)	20	X4 or Y4 - Channel 5 (-)
21	X5 or Y5 - Channel 6 (+)	22	X5 or Y5 - Channel 6 (-)
23	X6 or Y6 - Channel 7 (+)	24	X6 or Y6 - Channel 7 (-)
25	X7 or Y7 - Channel 8 (+)	26	X7 or Y7 - Channel 8 (-)
27	X8 or Y8 - Channel 9 (+)	28	X8 or Y8 - Channel 9 (-)
29	X9 or Y9 - Channel 10 (+)	30	X9 or Y9 - Channel 10 (-)
31	X10 or Y10 - Channel 11 (+)	32	X10 or Y10 - Channel 11 (-)
33	X11 or Y11 - Channel 12 (+)	34	X11 or Y11 - Channel 12 (-)
35	X12 or Y12 - Channel 13 (+)	36	X12 or Y12 - Channel 13 (-)
37	X13 or Y13 - Channel 14 (+)	38	X13 or Y13 - Channel 14 (-)
39	X14 or Y14 - Channel 15 (+)	40	X14 or Y14 - Channel 15 (-)
41	X15 or Y15 - Channel 16 (+)	42	X15 or Y15 - Channel 16 (-)
43	Unused	44	Unused

5.2.4 Table D Modules 8AO20M, 16AI20M, 16AI8AO

Analog Output and Combination Analog Input and Output modules.

Note: Assignments are a template showing 16 analog input and 16 analog output channels. Fewer channels may be present on the specific module being installed.

E2/EB-8AO20M-D

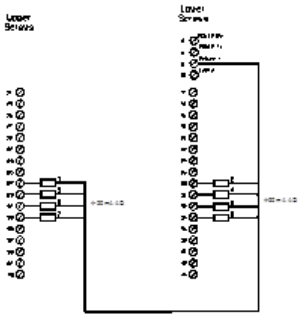

E2/EB-16AI20M-D

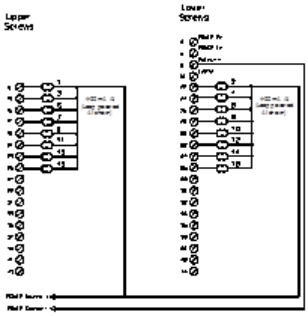

E2/EB-16AI8AOM

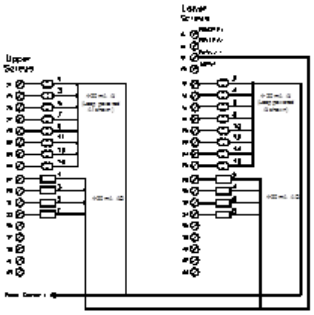

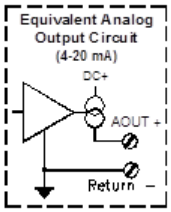

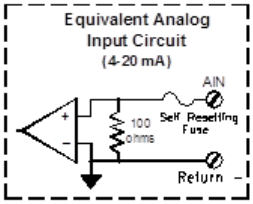

Upper Row		Lower Row	
Term #	**Function**	**Term #**	**Function**
11	AX0 - AI Channel 1	12	AX1- AI Channel 2
13	AX2 - AI Channel 3	14	AX3 - AI Channel 4
15	AX4 - AI Channel 5	16	AX5 - AI Channel 6
17	AX6 - AI Channel 7	18	AX7 - AI Channel 8
19	AX8 - AI Channel 9	20	AX9 - AI Channel 10
21	AX10 - AI Channel 11	22	AX11 - AI Channel 12
23	AX12 - AI Channel 13	24	AX13 - AI Channel 14
25	AX14 - AI Channel 15	26	AX15 - AI Channel 16
27	AY0 - AO Channel 1	28	AY1- AO Channel 2
29	AY2 - AO Channel 3	30	AY3 - AO Channel 4
31	AY4 - AO Channel 5	32	AY5 - AO Channel 6
33	AY6 - AO Channel 7	34	AY7 - AO Channel 8
35	Unused	36	Unused
37	Unused	38	Unused
39	Unused	40	Unused
41	Unused	42	Unused
43	Unused	44	Unused

5.2.5 Table E Modules 10RTD

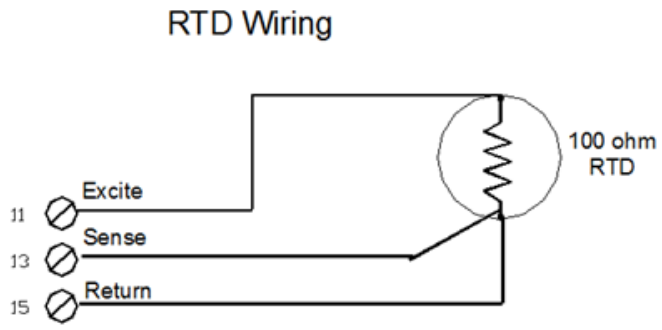

Upper Row		Lower Row	
Term #	**Function**	**Term #**	**Function**
11	EXC-1	12	EXC-2
13	SNS-1 (AX0)	14	SNS-2 (AX1)
15	RTN-1	16	RTN-2
17	EXC-3	18	EXC-4
19	SNS-3 (AX2)	20	SNS-4 (AX3)
21	RTN-3	22	RTN-4
23	EXC-5	24	EXC-6
25	SNS-5 (AX4)	26	SNS-6 (AX5)
27	RTN-5	28	RTN-6
29	EXC-7	30	EXC-8
31	SNS-7 (AX6)	32	SNS-8 (AX7)
33	RTN-7	34	RTN-8
35	EXC-9	36	EXC-10
37	SNS-9 (AX8)	38	SNS-10 (AX9)
39	RTN-9	40	RTN-10
41	Unused	42	Unused
43	Unused	44	Unused

5.2.6 Table F Modules 16ISOTC

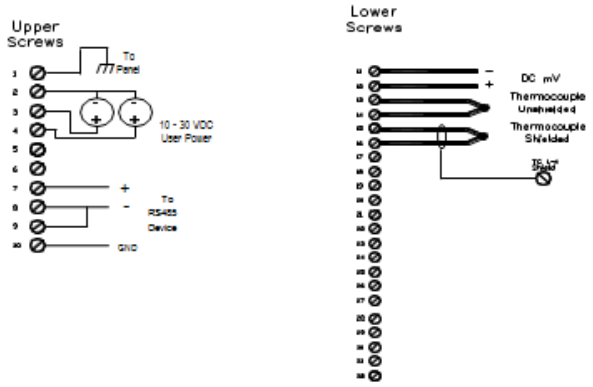

Upper Row		Lower Row	
Term #	**Function**	**Term #**	**Function**
1	Earth	11	AX0 - TC 1 (+)
2	PWR GND	12	AX0 - TC 1 (-)
3	PWR	13	AX1 - TC 2 (+)
4	PWR2	14	EXC-4
5	PWR OUT+	15	AX2 - TC 3 (+)
6	WATCHDOG	16	AX2 - TC 3 (-)
7	RS485 +	17	AX3 - TC 4 (+)
8	RS485 -	18	AX3 - TC 4 (-)
9	RS485 Term	19	AX4 - TC 5 (+)
10	RS485 GND	20	AX4 - TC 5 (-)
		21	AX5 - TC 6 (+)
		22	AX5 - TC 6 (-)
		23	AX6 - TC 7 (+)
		24	AX6 - TC 7 (-)
		25	AX7 - TC 8 (+)
		26	AX7 - TC 8 (-)
		27	AX8 - TC 9 (+)
		28	AX8 - TC 9 (-)
		29	AX9 - TC 10 (+)
		30	AX9 - TC 10 (-)
		31	AX10 - TC 11 (+)
		32	AX10 - TC 11 (-)
		33	AX11 - TC 12 (+)
		34	AX11 - TC 12 (-)
		35	AX12 - TC 13 (+)
		36	AX12 - TC 13 (-)
		37	AX13 - TC 14 (+)

	38	AX13 - TC 14 (-)
	39	AX14 - TC 15 (+)
	40	AX14 - TC 15 (-)
	41	AX15 - TC 16 (+)
	42	AX15 - TC 16 (-)

Note: The screw terminals used on the E2-BASE-TC-1(used in E2-16ISOTC-D only) can accept 30 to 16 AWG. The screw size is M2 and the recommended torque is 1.5 IN/LB.

5.2.7 Table G Module 16ISO20M

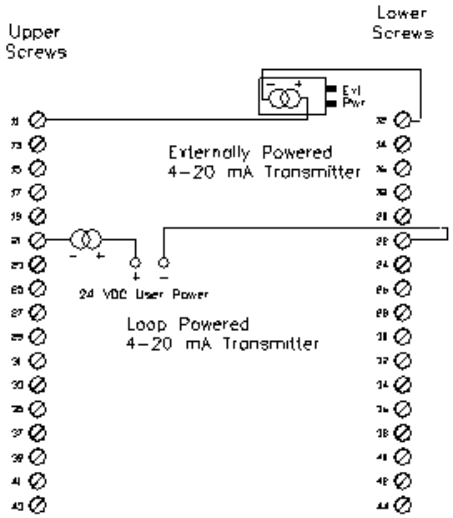

Upper Row		Lower Row	
Term #	**Function**	**Term #**	**Function**
11	AX0 - Channel 1 (+)	12	AX0 - Channel 1 (-)
13	AX1- Channel 2 (+)	14	AX1- Channel 2 (-)
15	AX2 - Channel 3 (+)	16	AX2 - Channel 3 (-)
17	AX3 - Channel 4 (+)	18	AX3 - Channel 4 (-)
19	AX4 - Channel 5 (+)	20	AX4 - Channel 5 (-)
21	AX5 - Channel 6 (+)	22	AX5 - Channel 6 (-)
23	AX6 - Channel 7 (+)	24	AX6 - Channel 7 (-)
25	AX7 - Channel 8 (+)	26	AX7 - Channel 8 (-)
27	AX8 - Channel 9 (+)	28	AX8 - Channel 9 (-)
29	AX9 - Channel 10 (+)	30	AX9 - Channel 10 (-)
31	AX10 - Channel 11 (+)	32	AX10 - Channel 11 (-)

33	AX11 - Channel 12 (+)	34	AX11 - Channel 12 (-)
35	AX12 - Channel 13 (+)	36	AX12 - Channel 13 (-)
37	AX13 - Channel 14 (+)	38	AX13 - Channel 14 (-)
39	AX14 - Channel 15 (+)	40	AX14 - Channel 15 (-)
41	AX15 - Channel 16 (+)	42	AX15 - Channel 16 (-)
43	Unused	44	Unused

5.2.8 Table H Module 16DORLY

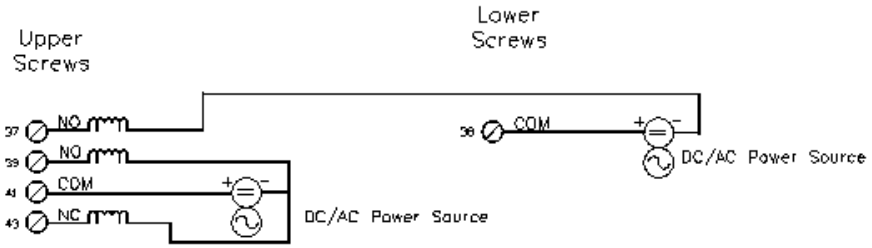

Upper Row		Lower Row	
Term #	**Function**	**Term #**	**Function**
11	Y0 - Channel 1 (NO)	12	Y0 - Channel 1 (COM)
13	Y1 - Channel 2 (NO)	14	Y1 - Channel 2 (COM)
15	Y2 - Channel 3 (NO)	16	Y2 - Channel 3 (COM)
17	Y3 - Channel 4 (NO)	18	Y3 - Channel 4 (COM)
19	Y4 - Channel 5 (NO)	20	Y4 - Channel 5 (COM)
21	Y5 - Channel 6 (NO)	22	Y5 - Channel 6 (COM)
23	Y6 – Channel 7 (NO)	24	Y6 - Channel 7 (COM)
25	Y7 - Channel 8 (NO)	26	Y7 - Channel 8 (COM)
27	Y8 - Channel 9 (NO)	28	Y8 - Channel 9 (COM)
29	Y9 - Channel 10 (NO)	30	Y9 - Channel 10 (COM)
31	Y10 - Channel 11 (NO)	32	Y10 - Channel 11 (COM)
33	Y11 - Channel 12 (NO)	34	Y11 - Channel 12 (COM)
35	Y12 - Channel 13 (NO)	36	Y12 - Channel 13 (COM)
37	Y13 - Channel 14 (NO)	38	Y13 - Channel 14 (COM)
39	Y14 - Channel 15 (NC)	40	Y15 - Channel 16 (NC)
41	Y14 - Channel 15 (COM)	42	Y15 - Channel 16 (COM)
43	Y14 - Channel 15 (NO)	44	Y15 - Channel 16 (NO)

5.2.9 Table I Module E2-MIX20884-D

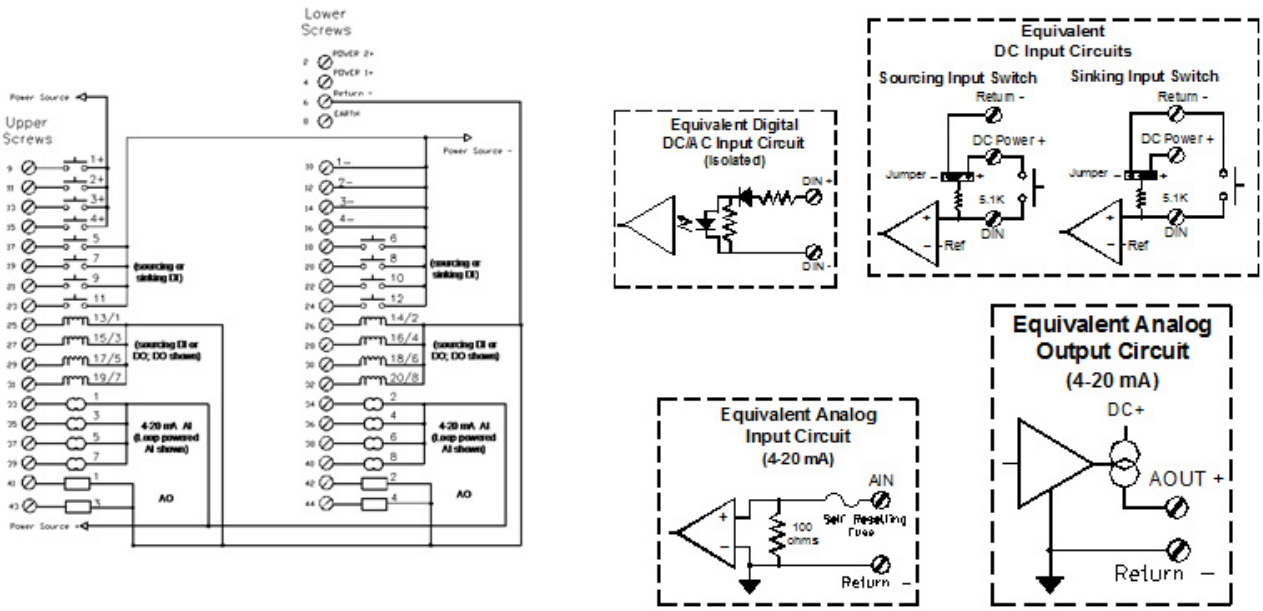

Upper Row		Lower Row	
Term #	**Function**	**Term #**	**Function**
1	Y0 - Channel 1 (NO)	2	Power In_2 (+) [Does not power DO and AO]
3	RS485(-)	4	Power In_1(+) (power all module functions)
5	RS485-Gnd	6	Power Ground
7	Watchdog out	8	Earth Ground
9	+ X0 - Din1	10	- X0 - Din1
11	+ X1 - Din2	12	- X1 - Din2
13	+ X2 - Din3	14	- X2 - Din3
15	+ X3 - Din4	16	- X3 - Din4
17	X4 - Din5	18	X5 - Din6
19	X6 - Din7	20	X7 - Din8
21	X8 - Din9	22	X9 - Din10
23	X10 - Din11	24	X11 - Din12
25	X12 - Din13, Y0 - Dout1	26	X13 - Din14, Y1 - Dout2
27	X14 - Din15, Y2 - Dout3	28	X15 - Din16, Y3 - Dout4
29	X16 - Din17, Y4 - Dout5	30	X17 - Din18, Y5 - Dout6
31	X18 - Din19, Y6 - Dout7	32	X19 - Din20, Y7 - Dout8
33	AX0 - Ain1	34	AX1 - Ain2
35	AX2 - Ain3	36	AX3 - Ain4
37	AX4 - Ain5	38	AX5 - Ain6
39	AX6 - Ain7	40	AX7 - Ain8
41	AY0 - Aout1	42	AY1 - Aout2
43	AY2 - Aout3	44	AY3 - Aout4

Chapter 6 I/O Functions

This section describes the characteristics of the various I/O functions found in this family of I/O modules. Each topic in this section identifies which modules in the EtherTRAK-2 I/O product family include each feature.

6.1 High Density Discrete Outputs

Applicable to: *E2-MIX24880(9-24), E2-MIX24882, E2-MIX24882, E2-MIX20884(5-20), E2-32DI24*

Standard high density discrete inputs accept input voltages in the range of the specified power supply voltage (10 to 30 VDC, 5-30 VDC on MIX20884) and are referenced to the power return (-) to simplify field wiring. These inputs are the "sourcing type" which means they indicate an ON condition when a positive voltage source, above the threshold level is applied to them. These inputs may be filtered to make them immune to short duration voltage spikes or mechanical contact bounce by configuring them for "Slow Response", which is approximately 6 ms.

Discrete Input Range: 10-30 VDC

6.2 Sourcing/Sinking Input Option

Applicable to: *E2-MIX24880 (1-8), E2-MIX24882, E2-MIX20884 (5-12), E2-32DI24*

The first eight discrete inputs (terminals 11 - 18, 17-24 on MIX20884) may be configured as sourcing inputs (ON when positive voltage is applied) or sinking inputs (switch closures to ground). There is a selection jumper in the module's base that is easily accessed by unplugging the logic module and changing the DI jumper (refer to DI COM Jumper Setting in Chapter 3 of this manual and follow the directions). Once sink/source is properly configured for "DC-" or "DC+", the module's firmware performs a consistency check to verify that the hardware and software selections match. When the module is configured for "Follow Jumper" the module's firmware will take on the state of the jumper.

6.3 Low Threshold Inputs

Applicable to: *E2-MIX24880, E2-MIX24882, E2-32DI24, E2MIX20884(5-12)*

The first group of eight inputs may also be modified to transition at a threshold voltage lower than the factory setting of 9 volts. This is accomplished by soldering a resistor into the wiring base which is located alongside the DI COM jumper.

Note 1: This modification is recommended for advanced users only. Please contact Red Lion Technical Support regarding details for this modification.

Note 2: Isolated DI channels 1-4 are only low threshold channels

6.4 Isolated Discrete Inputs

Applicable to: *E2-MIX20884 (1-4), E2-16DI24, E2-16DIAC*

These inputs utilize two screws per input channel so that each input is isolated from all other channels and the module's internal circuitry. Except for the isolation characteristic, these inputs have the same characteristics as the high density inputs, including the counter functionality.

6.5 Discrete Input Counter Feature

Applicable to: *E2-MIX24880, E2-MIX24882, E2-MIX20884, E2-32DI24, E2-16DI24, E2-16DIAC*

Counter Modes: Count Up, Pulse Timing and Pulse Rate

To enable counters (16 registers: AX8 though AX23) or (12 registers AX8 through AX19 on E2-MIX20884), using the I/O Tool Kit or the module's web interface, go to the "Discrete Options" screen and check the "Enable Counters" checkbox. Go to the "Analog Input Channels" screen, select a cell and a pull down menu is displayed. Select the mode of operation for each counter function. In all 16 bit upward counting modes, the analog input register increases from 0 ' 32767, then wrap around to -32768 ' 0.

If the "Report all Counters as 32 Bit Values" checkbox is selected (Analog Options screen), the long integer input register (consecutive pair of analog registers) increases from 0 '2,147,483,647, then -2,147,483,648 and back to 0.

The menu selections for each of the available counter modes and their default resolutions are:

Pulse Accumulator	
Up Counter	16 bit (or 32 bit) upward accumulator of input pulses.
Run Time	
Run Time Sec	This is the On-time Timer feature that counts the time the associated input is in the ON state. Output is in Seconds.
Run Time Min	This is the On-time Timer feature that counts the time the associated input is in the ON state. Same as above, except the output is in Minutes.

Pulse Rate Timing	These 16 bit registers will record the pulse timing for the following timing intervals: 0.1 sec (100 ms), 0.2 sec (200 ms), 0.5 sec (500 ms), 1 second, 2 seconds, 5 seconds, 10 seconds, 30 seconds, or 60 seconds.
ON Pulse Width	Time in ms between consecutive leading (OFF to ON) and trailing (ON to OFF) edges.
OFF Pulse Width	Time in ms between consecutive leading (ON to OFF) and trailing (OFF to ON) edges.
	Notes regarding pulse width measurements: 1. Pulses longer than the maximum size allowed by the register will result in an overflow condition (full scale 16-bit value equal to 65535). 2. Pulses shorter than 1ms will not be accurately detected resulting in erroneous values. 3. If no edge is ever detected by an input, the result will read as $0000. Timing only begins when an edge is detected.

6.6 High Speed Counters

Applicable to: *E2-MIX24880, E2-MIX24882, E2-MIX20884, E2-32DI24, E2-16DI24*

High speed counters can be enabled on the first two to four channels. In the web server or I/O Tool Kit software "Discrete Options" configuration page, check "Enable high speed counters on Channel 1" and/or Channel 2 to enable these modes. This special mode functions in the same manner as the discrete input count feature for the corresponding input, except that the maximum count rate for the first and/or second input is increased to 50 kHz (2kHz on the E2/EB-16DI24-D).

Note 1: On the E2/EB-MIX-24880-D and E2/EB-32DI24-D modules only, the first high speed counter is connected to two isolated input screw terminals (43 and 44) and screw terminal 11 is disabled. If the high speed counting option is not selected, then the pulses are counted from the ordinary discrete input screw terminal in the manner typical of all other input channels. This isolated channel is capable of counting up to 50kHz (3,000,000 pulses/min).

Note 2: On the E2/EB-16DI24-D module only the first two isolated high-speed counters are capable of counting up to 2kHz (120,000 pulses/min).

6.7 Slow/Fast Response for All Discrete Inputs

In the web server or I/O Tool Kit software, select "fast response" to use no input filtering. DC input changes as fast as 1 ms will be detected. Selecting the "Slow response" setting will tell the module to look for stable inputs for approximately 25 ms. This setting will filter contact bounce, which often happens while counting mechanical switch closures in noisy environments.

6.8 Combination Discrete Inputs/Outputs

Applicable to: *E2-MIX24880(17-24), E2-MIX24882 (17-24), E2-MIX20884 (13-20)*

The last eight discrete I/O has both input and output capabilities at the same time. Output functionality for a given channel may be individually enabled in the "Feature" column of the Discrete Options configuration window. For compatibility with I/O drivers that write I/O in fixed blocks, all eight Y (output) registers are always assigned. Only outputs that are enabled may be turned ON. Other output values will be masked in the I/O module.

All eight channels are always active as inputs. Channels that do not have their output function enabled may be used as inputs. For channels configured as outputs, the input functionality may be used to detect faults in the corresponding outputs.

Important Note: The supply voltage used to power input devices connected to the combination I/O channels must match the supply voltage used to power the I/O module to avoid leakage paths or damage to the I/O circuitry on these modules. It is recommended that the same power supply be used to power the I/O module and input devices connected to these special I/O channels. If a voltage source is applied to the eight combination I/O channels that exceed the voltage supplied to the rest of the I/O module, unintended power paths may result.

6.9 High Density Discrete Output

Applicable to: *E2-32DO24*

High density discrete outputs provide:

a. Individual maximum outputs rated for 1 Amp per channel, 8 Amps total per module. Short duration inrush current as high as 2 Amps is permissible.

b. Sourcing switched output power at the voltage supplied to the module's supply voltage input (less a nominal voltage drop in the output's power switching device).

c. Current limiting is not provided on the outputs of this module.

6.10 Isolated Discrete Outputs

Applicable to: *E2-16DO24*

Isolated discrete outputs provide:

a. Individually isolated outputs rated for 1.0 Amp per channel at temperatures up to 60 °C. (0.75 Amps at higher temperatures). Current limiting provided on each output.

b. Two screw terminals, isolated from all other outputs and the module's internal circuitry, for each channel

c. Any voltage up to the rating of the module may be applied to each individual output.

6.11 Isolated Output Relays

Applicable to: *E2-16DORLY*

Isolated discrete output relays provide:

a. Individually isolated outputs rated for 1.0 Amp per channel.

b. Two screw terminals, isolated from all other outputs and the module's internal circuitry, for each channel.

c. Any voltage up to the rating of the module may be applied to each individual output.

6.12 Time Proportioned Outputs (TPO)

Applicable to: *E2-MIX24880, E2-MIX24882, E2-MIX20884-D, E2-32DO24, E2-16DO24*

The discrete output channels in all EtherTRAK-2 I/O modules are capable of functioning as time proportioned outputs. Time proportioned outputs pulse ON and OFF with a duty cycle proportional to an analog value stored in a corresponding analog output register. TPO outputs are a low cost way to get smooth proportional control of heaters and other process variables. Typically, TPO analog output registers are assigned to the output of PID or other control logic in an ISaGRAF or other control program. Use the module's web interface or the I/O Tool Kit software to set pulse cycling as fast as 10 ms or as slow (many minutes) as your system dynamics require. Each output may be individually configured as a TPO or ordinary discrete output.

In this example, TPO #1 has a 10 second cycle time and the analog value is 3276 (10% of full scale, which is typically 32767). The output will be ON for 1 second and OFF for 9 seconds during each 10 second period.

TPO #2 has a 2 second cycle time and the analog value is 26214 (80% of full scale). The output will be ON for 1.6 seconds and OFF for 0.4 seconds during each 2 second period.

TPO #3 has a 2 second specified cycle time, an analog value of 820 (2.5% of full scale) and a minimum ON/OFF time of 100 ms. Since the minimum cycle time is 100 ms and the calculated ON time is only 50 ms, the cycle time is readjusted by a factor of 2 to maintain the time proportion. The output will be ON for 100 ms and OFF for 3.9 seconds before repeating.

Note: Non-integral remainders of time are carried forward to the next cycle, to maintain long-term accuracy. (In Example TPO #3, the below minimum time is carried forward to the next time cycle. When the below minimum value is calculated, no ON time is set for that cycle.

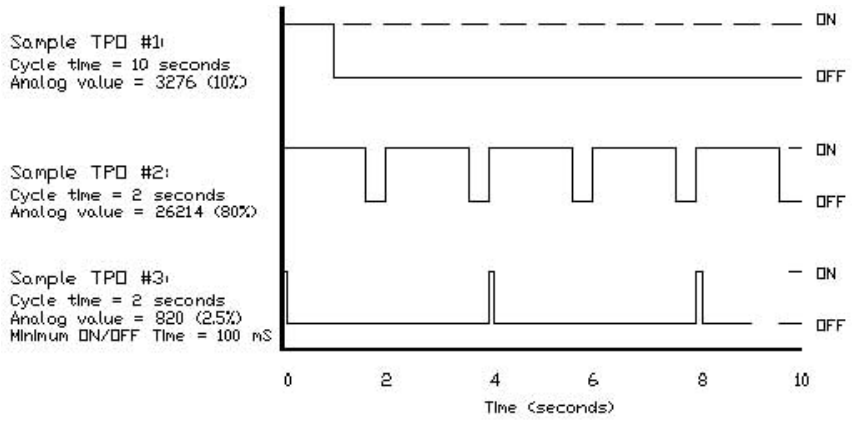

6.13 4-20 mA Analog Input Wiring

Applicable to: *E2-MIX24880, E2-MIX24882, E2-MIX20884, E2-32AI20M, E2-16AI20M, E2-16AI8AO*

The analog input channels accept 4-20 mA signals from a variety of devices and are protected by self-resetting current shunts to prevent shunt overheat/damage. One screw terminal is provided for each input signal. All analog inputs return to a common ground (terminal 8 or 6 depending on model). Refer to illustration: Base Power & Communications Wiring Diagram in Chapter 4.

Open Loop Detection on 4-20 mA Inputs

This module can detect and report an open instrumentation loop on its analog inputs. By allowing the module to report a negative value if the current falls below 4 mA, low limit logic in your DCS, PLC, RTU or computer can signal the loss of current.

To enable this feature, go to the web interface's "Analog Input Channels" configuration screen and select the corresponding "Feature 1" column. A dropdown menu will appear. Select the "- Below 4 mA" setting for each desired channel. Click on the Help button for further information.

6.14 Isolated Analog Inputs

Applicable to: *E2-16ISO20M*

The analog input channels accept 4-20 mA signals from a variety of devices. The inputs are isolated to prevent ground loops and reduce inter-channel noise.

6.15 Voltage Range Analog Inputs

Applicable to: *E2-32AI10V*

The input range on modules that have voltage range inputs is 0 to +10.0 volts. The high 16 bit resolution of the inputs generally permits adequate reading resolution for lower voltage input signals.

6.16 High Speed Analog Inputs

Applicable to: *All modules with analog inputs*

The first two analog inputs on all modules with non-isolated analog inputs may be configured as high speed analog inputs. Analog input channels configured in this manner will update as fast as 1 ms but at the expense of having only 10 bits of reporting resolution.

Note: By default, analog inputs integrate their 16 bit reported results to provide outstanding noise rejection. The scan time of these 16 bit inputs will vary with user configuration settings.

6.17 Analog Output

Applicable to: *E2-MIX24882, E2-MIX20884, E2-8AO20M, E2-16AI8AO*

Analog outputs on all applicable I/O modules in this product family have a 4-20 mA output range and may be incremented (varied) with a full 16 bit resolution corresponding to the value in the associated analog output (AY) register.

Note: Analog outputs on the E2-MIX20884 have a software selectable range of 0-20 mA, 4-20 mA, and 0-10 VDC.

6.18 RTD Inputs

Applicable to: *E2-10RTD*

The RTD inputs are applicable on the 10 channel RTD module. A 2 or 3 wire, 100 Ohm platinum resistance temperature detector may be used to measure temperature.

6.19 Thermocouple and mV Inputs

Applicable to: *E2-16ISOTC*

The thermocouple and mV input range is 250mV. Each channel may be configured as a thermocouple or mV range input via software (Tool Kit and/or web browser). The thermocouple types supported are J,K,E,R,T,B,C,N,S.

Four cold junction compensation (CJC) temperatures are provided in the module to determine screw terminal temperatures of all 16 channels. Each CJC temperature sensor is positioned underneath the screw terminals and measures the temperature of four screw terminals. These temperatures can be read using Sixnet or Modbus protocol at AI:16 - 19 (3:0017-3:0019). The first sensor (AI:16) measures the screw terminal temperature of channels 1-4 (AI:0-3). The second (AI:17) measures the screw terminal temperature of channels 5-8 (AI:4-7). The third (AI:18) measures the screw terminal temperature of channels 9-12 (AI:8-11). The fourth (AI:19) measures the screw terminal temperature of channels 13-16 (AI:12-15).

With firmware version 01.24 or higher the cold junction compensation temperatures reported are redundant and provide error reporting. If any of the CJC sensors fail, report an inaccurate temperature or valid temperature cannot be ascertained the module will fall back to the linear average of the remaining sensors, the last known good value or 25°C depending on the failure state. This way the thermocouple channels will always report the most accurate value possible even if one or more all the CJC temperature sensors fail. The four failure states, the error reported and the corresponding fallback state are defined below.

GOOD (measured screw terminal temperature): In this state there are no error conditions found. All the CJC sensors (AI:16-19) will report only the measured temperature.

DEAD (-1000): In this state the module firmware has determined that one or more CJC sensors are non-responsive to communication polling. In this state the sensor(s) reported temperature value will change to -1000. When the sensor is in the DEAD state the module firmware will substitute the linear average of the remaining GOOD CJC sensors on that module for the DEAD sensor. The substitution will ensure the temperature reported on the associated thermocouples is still accurate even though the CJC sensor is not working.

FAULTY (-2000): In this state the module will determine if the CJC sensors are reading realistic values. If one or more of the CJC sensors are reporting unrealistic temperature values then the value reported in the analog registers will be -2000. The valid temperature range is hard-coded at -50 to +100°C (outside the modules operating temperature with some overhead to account for ambient temperature fluctuations). When the CJC sensor is in the FAULTY state the module firmware will substitute the linear average of the remaining GOOD CJC sensors on that module for the DEAD sensor. The substitution will ensure the temperature reported on the associated thermocouples is still accurate even though the CJC sensor is not reporting the correct temperature.

QUESTIONABLE (-3000): This condition determines if one or two sensors don't agree with the other sensors by comparing each CJC temperature sensor with adjacent sensors. If the CJC sensor differs by 10°C or more from an adjacent CJC sensor it is considered QUESTIONABLE and the reported value will be -3000. When the sensor is in the QUESTIONABLE state the module firmware will substitute the linear average of the remaining GOOD CJC sensors on that module for the DEAD sensor. The substitution will ensure the temperature reported on the associated thermocouples is still accurate even though the CJC sensor is not reporting the correct temperature.

INDETERMINATE (-4000): When none of the CJC sensors can agree on the temperature reported, the temperature on all the sensors will be -4000. This condition may occur if all the sensors are in a QUESTIONABLE state or two sensors are reporting a bogus temperature. This is a multiple failure mode, which must be INDETERMINATE for functional sensors. DEAD or FAULTY sensors will continue to report that state. When a CJC sensor is determined to be INDETERMINATE the module firmware will substitute the CJC sensor value with 25 degrees C when the module is initialized on power-up or the last known good value. The substitution will ensure the temperature reported on the associated thermocouples is as accurate as possible even though the CJC sensor is not reporting the correct temperature.

6.20 Watchdog Output

Applicable to: *All I/O modules*

A microprocessor in the module continuously monitors several user-selected system functions. Additionally, an independent CPU watchdog microprocessor in the module also monitors the main CPU and can be used to indicate a failure of the main CPU. The watchdog options are (as selected in the web interface or I/O Tool Kit software):

Power 1 Failure

Power 2 Failure

PoE Failure (Not valid on all modules)

Ethernet Ring Failure

Watchdog CPU Monitor

The default state of the Watchdog Output (screw terminal #9 or #7 on the I/O module's wiring base, consult base silk-screen or Section 4.5) is ON (True). If an error condition in any one of the user-selected parameters is detected, the Watchdog will output an OFF (False) state.

The default watchdog time period is 3 seconds, and may be set as high as 65 seconds to allow for telemetry equipment or application-related program delays. The timer period selected will apply individually to each watchdog function selected.

6.21 Heartbeat Monitor

Applicable to: *All I/O modules*

The heartbeat monitor is a software selection in the "Watchdog/Heartbeat Monitor" configuration page. When the heartbeat timeout option is selected the module firmware will monitor a discrete register of choice (virtual or physical) for a heartbeat toggle. When a heartbeat toggle has not been received on the given heartbeat register within the given Heartbeat Timeout period the module can be configured to drop outputs (virtual and/or physicals). This can be used as a failsafe incase the Controller, RTU, or SCADA system writing the outputs to the EtherTRAK-2 modules fails. Please see the Tool Kit or web user interface help for more information on how to configure this feature.

Chapter 7 Communications

7.1 Dual Ethernet Mode Configuration Alternatives

Use either the web server within the module or the I/O Tool Kit Windows-based configuration tool to configure the two Ethernet ports.

NOTES:

1. The Dual Ethernet Mode selected in this option must match the jumper setting in the base. Refer to Chapter 3 "Jumper Settings", "Network Jumper Setting" in this document.
2. If the jumper is missing, the setting in the base defaults to the "Two Networks" mode.
3. The red alert LED on Dual Ethernet module will blink if the configuration setting mismatches the hardware jumper setting.
4. The default state of this configuration option is "follow the Jumper", so the initial set up can be done with out the configuration of the Sixnet I/O Tool Kit.

In the Ethernet configuration screen, and choose one of these four options that is appropriate for your application (refer to the Help files for additional configuration information):

Ethernet Passthru

An unmanaged switch in the module passes Ethernet traffic between the ports. This option allows I/O modules to be daisy-chained without the need for external switches.

Ring Switch

This option allows the two Ethernet ports to act as Real-time™ ring switch ports. This mode should only be used if this module will be placed in a closed ring consisting of other similarly configured I/O modules, and Real-time Ring™ switches. **Note:** closing the ring when this mode is disabled will adversely affect network communications. Close the ring only after this mode is configured, open the ring before disabling this mode.

Two Networks

In this option, traffic is blocked between the two Ethernet Ports so that the I/O module can be connected to two independent networks. Each Ethernet port will require its own IP address.

Follow the Jumper

When this option is selected the communications mode will follow the state of the network mode hardware jumper on the base. The alert LED will not blink because of a jumper mismatch in this mode.

7.2 Communication Ports Overview

The EtherTRAK-2 I/O modules' wiring base subassembly has the following communication ports and connectors:

EtherTrak-2 Product	Two Ethernet Ports - Style	USB Port Style	RS485 Port Style
Applicable to all modules in the product family	RJ45 (shielded)	Type B (Shielded)	Screw Terminals

NOTE: EtherTRAK-2 I/O includes two Ethernet RJ45 ports. Note that for modules with the Etherbus option (EB-), use "PoE ETHERNET 1" port when bringing power from the Ethernet fieldbus cable into the module (refer to Chapter 4 "Power Wiring Alternatives").

Ethernet Port

A 10/100BaseT dual Ethernet ports are found on all units. Standard RJ45 connectors are provided with standard 802.11 pin-outs. These ports have fixed unique MAC addresses. The IP addresses can be set with the Red Lion I/O Tool Kit software or through a web browser. Further details are available in the I/O Toolkit documentation or the web browser documentation.

Use data-quality (not voice-quality) twisted pair cable rated category 5 with standard RJ45 connectors. For best performance use shielded cable. These modules have an auto-crossover feature and may be connected with either straight through or cross-over type cables.

The protocols supported are different depending on how you are using the port. When the module is used in a slave mode UDP/IP and TCP/IP protocols maybe used. When using the I/O transfer feature in the module (master mode) only the UDP/IP protocol may be utilized.

USB Port

The USB port is intended for configuring the module only. It is possible to make I/O requests through the USB port in Universal (native) protocol. This port may not be configured as a Modbus port.

RS485 Port

This port is found on the base for all EtherTRAK-2 I/O Modules. It provides a RS485 (2-wire, half duplex only) connection to other RS485 equipment. Screw terminals are available for RS485+, RS485-, RS485 GND and RS485 Termination.

In order to assure proper communication, you should connect (+) to (+) and (-) to (-) between units. It is highly recommended that you tie the signal ground to an appropriate ground (if available) between all RS485 units. Make sure to use a good quality communication cable with three conductors (twisted is preferred) plus a shield. To prevent ground loops, the shield should be connected to chassis ground on only one end of any cable run.

Note: If you have existing wiring that has only two conductors and a shield, you can use the shield to connect the signal grounds between stations. This is not optimal (especially for long cable runs) but should work in most situations.

The RS 485 port is not isolated (with the exception of the E2/EB-10RTD-D and E2-MIX20884-D), therefore you must use a common power ground between stations in order to connect the 485 signal grounds. Some applications make use of longer distances where a common ground may not be possible. When long distance connections are used, it is highly recommended that you use an optical isolator between devices without a common ground to assure proper, problem free operation.

RS485 Termination: All these units have RS485 termination components (150 ohm resistor and a 0.1 F capacitor connected in series) already inside. To terminate your RS485 network on an EtherTRAK-2 I/O Module, just jumper the "RS485 -" (terminal 3) to the "RS485 TERM" (terminal 5). Make sure to use the same type and size conductor as already used for

your RS485 minus (-) connection. It is recommended that both end stations of your RS485 network be terminated. Avoid terminating more than two stations. Note: The E2-MIX20884-D uses a termination jumper (see the RS485 jumper topic in section 3.3).

NOTE: EtherTRAK-2 I/O modules can act as Ethernet to RS485 converters and "Passthru" (pass through) Modbus or Sixnet messages from Ethernet to RS485. In this "Passthru" mode, these modules do not convert protocols. If a module's serial port is configured for Modbus Passthru mode, then you must communicate to the gateway over Ethernet with Modbus/TCP or Modbus/UDP. If the module's serial port is configured for Sixnet Passthru mode, then you must communicate to the gateway over Ethernet with the Sixnet protocol.

7.2.1 RS-485 Modes of Operation

The EtherTRAK-2 I/O Modules can be configured have the following modes of operation that can be configured with the web server or the I/O Tool Kit Windows software:

Select the protocol that the I/O module will send or respond to. The choices are:

Sixnet Universal Binary and Modbus RTU Master	This port will transmit requests in Universal Binary and Modbus RTU protocols. (Requests can be "Passthru" messages or I/O Transfers as defined with this module's configuration.)
Sixnet Universal Hex and Modbus ASCII Master	This port will transmit requests in Universal Hex and Modbus ASCII protocols. (Requests can be "Passthru" messages or I/O Transfers as defined with this module's configuration.)
Sixnet Slave	The port will respond to Sixnet Universal protocol requests in either Hex or Binary Format.
Modbus RTU Slave	The port will respond to requests in Modbus RTU protocol.
Modbus ASCII Slave	The port will respond to Modbus ASCII requests.
Disabled	No protocol supported. Port is inactive.

Chapter 8 EtherTRAK-2 Status

8.1 EtherTRAK-2 LEDs

Every EtherTRAK-2 I/O module has an array of LEDs on its front panel. These LEDs can be useful for system diagnostics. These LEDs can be observed in the following states:

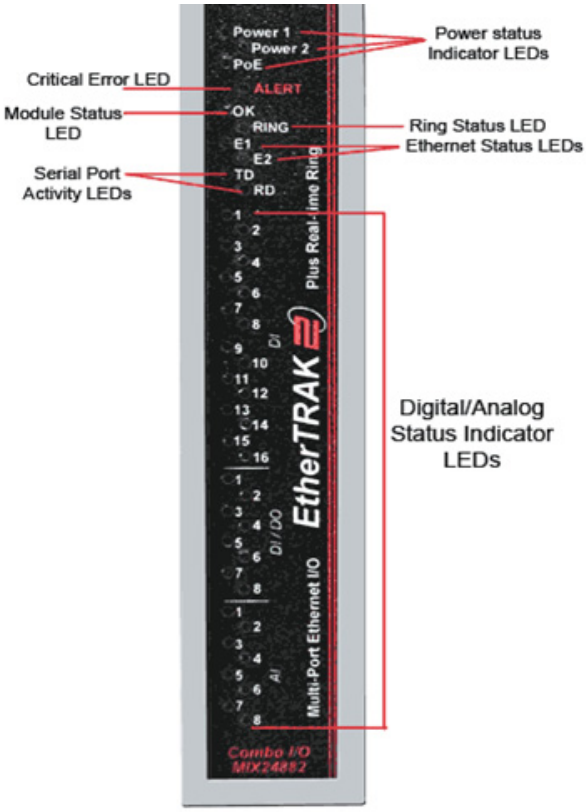

8.2 Power LED Indication

Each module has 3 green Power LED's which are Power 1, Power 2, and PoE. These LEDs are associated with the 3 possible power sources of the EtherTRAK 2 I/O module. If a power supply is connected to the associated screw terminal, the corresponding LED will be ON. In the case of the PoE LED, the PoE option must be populated in the module and the PoE must be injected in the first Ethernet port for this LED to illuminate.

8.3 Alert LED Indication

There is a single ALERT OK which is red in color and is used to display critical errors in the module. The ALERT LED has the following behavior:

Full OFF	Everything is OK.
2 ON Blips repeating	Bad configuration data has been loaded to the module. Try re-loading the configuration.
3 ON Blips repeating	Hardware DI jumper does not match loaded configuration.
1 OFF Blip repeating	Could not open configuration file (file corrupt in memory).
2 OFF Blips repeating	File System Fatal Error (corrupt flash memory).
3 OFF Blips repeating	Fatal Hardware Failure.

8.4 OK LED Indication

There is a single OK LED which is green in color and is used to display the status of the module. It has the following functions:

ON Solid	The OK LED will be in a steady ON state when both P1 and P2 power inputs are powered and that all configured rings have continuous ring integrity.
OFF Completely	The OK LED will be OFF if either P1 and/or P2 is not powered, or if any one of the active rings for which this switch is a member of encounters a segment failure.
Blinking	To verify communication and target switch selection, you can request the module to "wink" (10 blinks/sec) its OK LED to visually identify the unit. This function is controlled through the Windows configuration and maintenance software tools.

8.5 Ring LED Indication

The "Ring" LED that is illuminated if the Ethernet ring is closed (complete Ethernet ring) and not illuminated if a ring is not configured. Other active ring conditions are as follows:

Blinking	A blinking LED (500 ms ON, 500 ms off), is an indication if ring is incomplete, but ring ports see an adjacent ring partner.
Blip	An LED Blip (100 ms ON, 900 ms OFF) is an indication that there is a missing ring partner.

8.6 Ethernet Link Activity Indication

Each Ethernet port (E1 and E2) has a single corresponding LED which is used to indicate link and activity. The LED's are green in color and have the following behavior.

OFF Completely	Unlinked / Disconnected
ON Solid	Linked (either 10/100 speed)
Blinking	Linked and activity is present

8.7 TR/RD Activity Indication

Depending on the option selected by the user, the TD / RD LEDs indicate activity. The LED microcontroller will pulse stretch an indication that data has been received or transmitted. The choices for the user configuration are:

a. Any serial port

b. USB port

c. RS485 port

8.8 Discrete LED Indication

Discrete LEDs are status indicators for physical outputs or inputs based on corresponding binary tags as defined below.

Discrete Outputs	Discrete Outputs each have a single associated LED which is green in color. This LED is ON when the output is ON and off when the output is OFF.
Discrete Inputs	Discrete Inputs have a single LED associated with each channel which are green in color and have the behavior listed below.
OFF Completely	Input is OFF.
ON Solid	Input is ON.
Blinking	When the frequency of an input (such as a counter signal) is increased, the LED will follow the input state up to approximately 20Hz, and will stop increasing its blinking rate further. This prevents the scan rate of the LED's from falling lock-step with the input frequency which could result in erratic LED behavior or patterns in the blink rate. This state doesn't apply to relay modules

8.9 Analog Input Status

The 4-20 mA, RTD, thermocouple and millivolt analog inputs have LED's that correspond to the following configuration:

ON Solid	This will be on solid if the read value is between 4 mA and 20 mA (zero and full scale) or when the RTD, thermocouple (burnout disabled) or millivolt is detected.
Blinking	This LED will be blinking if the value is between 1 mA and 4 mA, or greater that 20 mA (outside the normal operating range). Please note that calibration settings may alter the exact threshold for this state. Note: This state does not apply to the RTD, thermocouple or millivolt modules.
OFF Completely	In 4 to 20 mA channels when the value is less than 1 mA. In RTD temperature channels when the RTD is not present/functional or the channel is disabled. In thermocouple channels the burnout is detected. In millivolt channels no signal is detected.

Chapter 9 Configuring EtherTRAK-2 I/O Modules

9.1 WebServer Overview

EtherTRAK-2 I/O modules include an embedded web server. This is the primary and recommended means for configuring I/O modules as stand-alone, independent devices ready to communicate with I/O polling masters (process controllers). Users can use a standard web browser to access web pages to configure and maintain the module and to validate changes.

Features include:

- Communications Options
- I/O Configuration
- Maintenance and Monitoring
- Analog Calibration
- Advanced Tools
- Password Security
- User Documentation

Access the web server using any PC with an Ethernet communications port and plug into an Ethernet port on the EtherTRAK-2 base.

Please note that security options, including disabling the web server altogether, may be set using the I/O Tool Kit Windows software. Access the web server by simply pointing your browser to the IP address of the I/O module. Example: 10.1.0.1

Note: Recommended web browsers are Internet Explorer, Mozilla Firefox and Chrome. When using Internet Explorer please disable native XMLHTTP by going to Tools'Internet Options'Advanced.

Note: A load through the Red Lion Tool Kit must be done once or I/O channels will not work.

9.2 Setting the IP Address

The default IP address, as shipped from the factory is: 10.1.0.1

Change the IP address by accessing the web server pointed to the current IP address. You can also change the IP address using the I/O Tool Kit software, via the Ethernet port or the USB port.

9.3 Audit Trail Change History

View the configuration changes in the View Audit Trail window. This will show a list of all configuration changes made in the web browser. This information includes what configuration changes were made, the new and old value, when they were changed and by whom.

9.4 Adding User Documents to the Web Server

You may add your own project documentation to the web server in the I/O module. We recommend indexing your files (documents) from a single web page named: appl_doc. These web pages may be in a number of common formats such as .html, .shtml, or .pdf. The web server will search for this file and, if found, will automatically add a link to your documentation onto the main menu where it will be easily found by the user.

Web pages and associated files, such as graphics, will be stored in Flash memory in the wiring base. By storing this information in the wiring base, it will continue to be found (along with all the configuration information) if a module is replaced. There is approximately ½ Megabyte available for user documentation. The available size may vary when upgrades to the firmware or factory supplied web pages are updated. Additional memory may be available as a special order item.

Your own documentation pages may be uploaded into the module's wiring base. Refer to the online help files in the configuration tools for further details.

9.5 Sixnet® I/O Tool Kit Software

As an alternative to configuring I/O modules with their embedded web server, the Red Lion I/O Tool Kit Windows software may be used. The Windows software is strongly recommended in situations in which multiple devices (RTUs and I/O modules) will be interconnected in a coordinated system. The Tool Kit software coordinates and automates many aspects of project design including sharing I/O tags between I/O modules and the process controllers that poll them, and project-wide global error checking.

Refer to the online help within the Tool Kit for more information on using this software. Install from www.redlion.net.

Chapter 10 Module to Wiring Base Keying

This section is recommended for ADVANCED USERS ONLY that are in need of utilizing an existing wiring base with a different module than as originally received. Wiring bases shipped with I/O modules are pre-configured with their alignment keys in the appropriate position for that type of I/O module.

The EtherTRAK-2 module is secured to the base over two posts utilizing a keyed interface with retaining clips. The diagram below shows different combinations of the keying device in order to accommodate different modules. The purpose of the keys is to prevent accidental insertion of an incorrect module, thus preventing possible damage to a module or other equipment. Should it be required to use the existing base with a different module, it is possible to change the keying interface per the following instructions.

- When changing to different modules, it is recommended to remove all wiring from the base as wiring for the new module may be different than the existing module.
- Unclip the existing module by inserting a screwdriver in the slot on the end of the retaining clip on each end of the module, moving the clip outwards slightly to the unlocked position.
- Remove the module up and off from the base by pulling upwards from the base.
- Using a 3/16" socket or other suitable wrench, loosen each of the mounting posts slightly.
- Referring to the chart below, find the proper key for the module to be inserted, and then move the key wheels to the proper orientation.
- Retighten the mounting posts securely.
- Mount the new module making sure that the top of the module points towards the top of the base. The module wiring socket is keyed as well, so inadvertent upside down mounting should not be possible.
- Press in on the retaining clips on each end of the module to lock the module in place.
- The module assembly is now ready for wiring as per the screw terminal charts found in Chapter 5 in this manual.

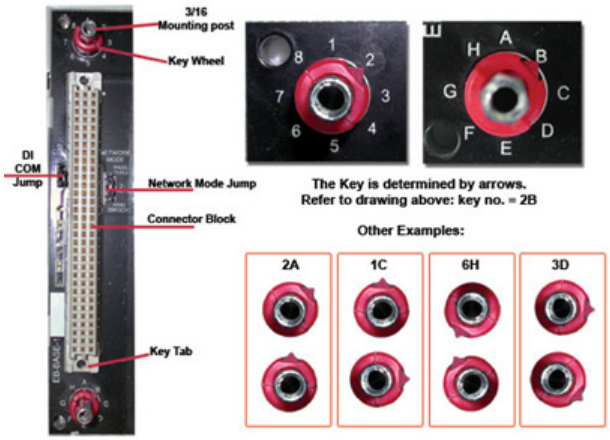

EtherTRAK-2 I/O Module Key Configuration Table - (see image above for key orientation)

Part Number Prefixes[2]	Part Number (Module w/Base)	Key	Description
E2- or EB-	MIX24880-D	2A	Combination I/O with one isolated input counter (see Note 1)
E2 - or EB-	MIX24882-D	2C	Combination I/O with two analog outputs (see Note 1)
E2-	MIX20884-D	2D	Combination I/O with 4 isolated high-speed counter inputs and 4 analog outputs.
E2- or EB-	32DI24-D	4A	32 inputs (10-30 VDC) including 16 multifunction counters
E2- or EB-	16DI24-D	4C	16 individually isolated 10-30 VAC/VDC with counters
E2-	16DIAC-D	6H	16 individually isolated 120 VAC (nominal) inputs
E2- or EB-	32DO24-D	5B	High density discrete outputs (0.5 Amp each, 8 Amp total)
E2- or EB-	16DO24-D	5D	Individually isolated outputs with self-resetting fuses (Note 2)
E2- or EB-	16DORLY-D	5G	14 Form A 2 Form C relay discrete outputs
E2- or EB-	32AI20M-D	3B	High density 16 bit 4-20 mA inputs with self-resetting fuses
E2- or EB-	32AI10V-D	3D	Voltage inputs (other ranges available as special order)
E2- or EB-	16AI20M-D	3B	16 channels 4-20 mA inputs with self-resetting fuses
E2- or EB-	8AO20M-D	3E	4-20 mA analog outputs
E2- or EB-	16AI8AO-D	3E	16 inputs and 8 outputs (4-20 mA range)
E2- or EB-	16ISOTC-D	3F	16 instrumentation inputs with J,K,E,R,T,B,C,N,S thermocouples
E2- or EB-	8ISOTC-D	3F	8 instrumentation inputs with J,K,E,R,T,B,C,N,S thermocouples
E2- or EB-	16ISO20M-D	3H	16 isolated analog inputs
E2- or EB-	10RTD-D	2G	RTD (100 Ohm platinum), -200 to 850°C

Notes:

Products that may be safely interchanged with no risk of damage are similarly keyed. This is generally the case with modules that are similar in function but contain a different number of I/O channels.

Keying assignments for all combinations involving #7 and #8 are reserved for OEM products.

Chapter 11 Service Information

Service Information

We sincerely hope that you never experience a problem with any Red Lion product. If you do need service, call Red Lion at 1-877-432-9908 for Technical Support. A trained specialist will help you to quickly determine the source of the problem. Many problems are easily resolved with a single phone call. If it is necessary to return a unit to us, an RO (Repair Order) can be obtained on the Red Lion website.

Red Lion tracks the flow of returned material with our RO system to ensure speedy service. You must include this RO number on the outside of the box so that your return can be processed immediately.

Be sure to have your original purchase order number and date purchased available.

We suggest that you give us a repair purchase order number in case the repair is not covered under our warranty. You will not be billed if the repair is covered under warranty.

Please supply us with as many details about the problem as you can. The information you supply will be written on the RO form and supplied to the repair department before your unit arrives. This helps us to provide you with the best service, in the fastest manner. Repairs are completed as soon as possible. If you need a quicker turnaround, ship the unit to us by air freight. We give priority service to equipment that arrives by overnight delivery.

We apologize for any inconvenience that the need for repair may cause you. We hope that our rapid service meets your needs. If you have any suggestions to help us improve our service, please give us a call. We appreciate your ideas and will respond to them.

For Your Convenience:

Please fill in the following and keep this manual with your Red Lion system for future reference:

P.O. #:_____ Date Purchased: _____

Purchased From:_____

Serial Number: _____

Product Support

Technical Support

Inside US: +1 (877) 432-9908
Outside US: +1 (717) 767-6511
Support: support.redlion.net
Hours: 8:00 am to 6:00 pm EST

Red Lion Controls
20 Willow Springs Circle
York, PA 17406
Website: www.redlion.net